Replenishment Belt Hopper
NBB 10 / NBB 20 / NBB 30

Translation of operating and installation instructions

This operation instruction applies to:

Type			Order number
Replenishment Belt Hopper NBB 10	24 VDC	Standard	15118141
	230 V / 50 Hz	Standard	18123257
		Heavy duty	15144144
	115 V / 60 Hz	Standard	15038267
		Heavy duty	15016291
Replenishment Belt Hopper NBB 20	24 VDC	Standard	15059461
	230 V / 50 Hz	Standard	15134353
		Heavy duty	15001006
	115 V / 60 Hz	Standard	15018864
		Heavy duty	15099904
Replenishment Belt Hopper NBB 30	24 VDC	Standard	15187880
	230 V / 50 Hz	Standard	15138503
		Heavy duty	15010207
	115 V / 60 Hz	Standard	50035832
		Heavy duty	15205835

Version of Documentation: BA_NBB10-30_R06.1_EN.docx

Release: R06.1

Date: 07/01/2021

Table of contents:

1 Safety instructions

1.1 Notes on symbols and instructions

Symbols: Assembly and commissioning must be carried out by qualified personnel only and according to these operating instructions.

Please observe the meaning of the following symbols and notes. They are grouped into risk levels and classified according to ISO 3864-2.

DANGER	
	Indicates an immediate threatening danger. **Non-compliance with this information can result in death or serious personal injuries (invalidity).**

WARNING	
	Indicates a possible dangerous situation. **Non-compliance with this information can result in death or serious personal injuries (invalidity).**

CAUTION	
	Indicates a possibly dangerous situation. **Non-compliance with this information can result in damage to property or light to medium personal injuries.**

NOTE	
	Indicates general notes, useful operator tips and operating recommendations which don't affect safety and health of the personnel.

1.2 Basic safety information

This operating instructions manual serves to provide the basis for safe operation of the NBB replenishment belt hopper. The notes on safety contained in this manual, in particular, are to be observed by all individuals working on or with the NBB. Additionally, the accident prevention regulations ruling on site must be observed. The manual is to be kept at the place of operation of the NBB at all times.

Operation of the hopper is only to be carried out by technically qualified personnel.

Qualified personnel are deemed to be persons who, by reason of their training, experience and instructions as well as their knowledge of the prevailing standards, regulations, accident prevention regulations and operational conditions, have been authorized by the people responsible for the safety of the system to perform the required activities, and who are capable of recognizing possible hazards and avoiding them (definition of qualified personnel as per IEC 364).

The following instructions are not only intended to ensure the personal safety of the operators but also the operation of the products described and the devices connected to them:

1.2.1 Electrical hook-up

NOTE	
	▪ **Disconnect the power supply prior to assembling or dismantling as well as when changing fuses or carrying out installation modifications.** ▪ **Observe all current accident prevention and safety regulations applicable to particular cases of operation.** ▪ **Check whether the rated voltage of the hopper coincides with the local power supply prior to putting into operation.** ▪ **All E-Stops must remain effective for all modes of operation. Unlocking the E-Stops must not, under any circumstances, cause uncontrolled restarting of the hopper.** ▪ **The electrical connections must be safeguarded!** ▪ **Ground wires must be checked for proper function subsequent to assembly!** ▪ **Connection is only to be carried out by authorized personnel.**

1.2.2 Specific danger points

⚠ CAUTION	
	Although the conveyor belt only operates at a slow speed the danger of parts of the operator's body being pinched does exist at the following points as a result of the application and operation of the hopper: **a) Space near Sprockets and chains (guard removed)** **b) Narrow space between hinged spout and belt (underside of hopper)** **c) Narrow space between trough and belt and between and between guard and belt (rear side and underside of hoper)**

Figure 1: *NBB hazard zones*

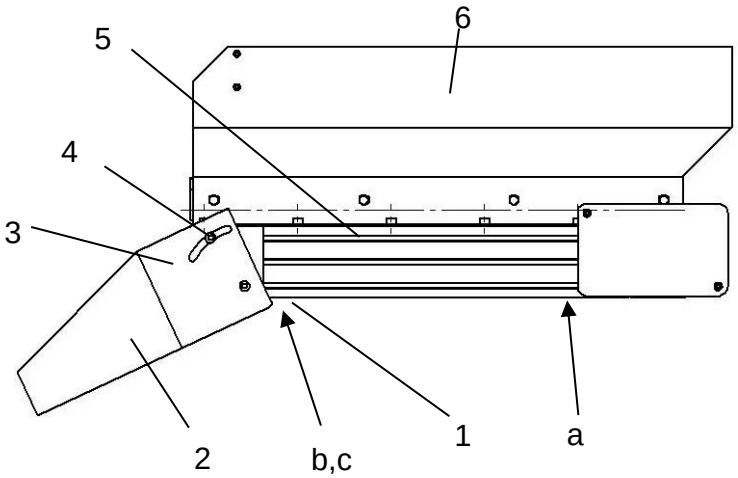

Measures to avoid the hazards mentioned above:

NOTE	
	▪ **Disconnect the power supply prior to assembly or dismantling as well as when changing fuses or carrying out installation modifications.** ▪ **Do not manipulate or tinker with the system at the hazard zones (a, b, c) with the hopper powered up or during operation.** **Should, in spite of these measures, a hazard to the operating personnel continue to exist as a result of the operation of the hopper, the user must ensure that the points of hazard are suitably guarded.**

1.3 Appropriate use

The NBB hopper described here serves the storage, filling and conveyance of components to feeding equipment or automation systems. Any other use is deemed to be improper.

Hopper's fields of application:

- Storage of parts for sorting and feed units (longer refill intervals for the operating personnel)
- Loading packaging systems and weigh scales
- Metered parts supply
- Major improvement of the transport properties of feed units
- Reduction in the size of feed units and thus reductions in costs and space requirements by means of supplying parts from an external source.

NOTE	
!	**Any use other than that described above is deemed to be improper and will cause the warranty to terminate.**

Also refer here to our general terms and conditions of sale.

2 Description of the device

2.1 General

The basic design of the replenishment belt hopper NBB includes a conveyor belt

(Item No. 5) located in a frame which transports parts to an inclined chute (spout) (items No. 2). For the purpose of achieving a certain load volume a parts storage container (trough) (item No. 6) is attached to the belt. The belt is driven by a worm gear motor (item No. 7) (see Figure 2).

Figure 2: *Assembly NBB*

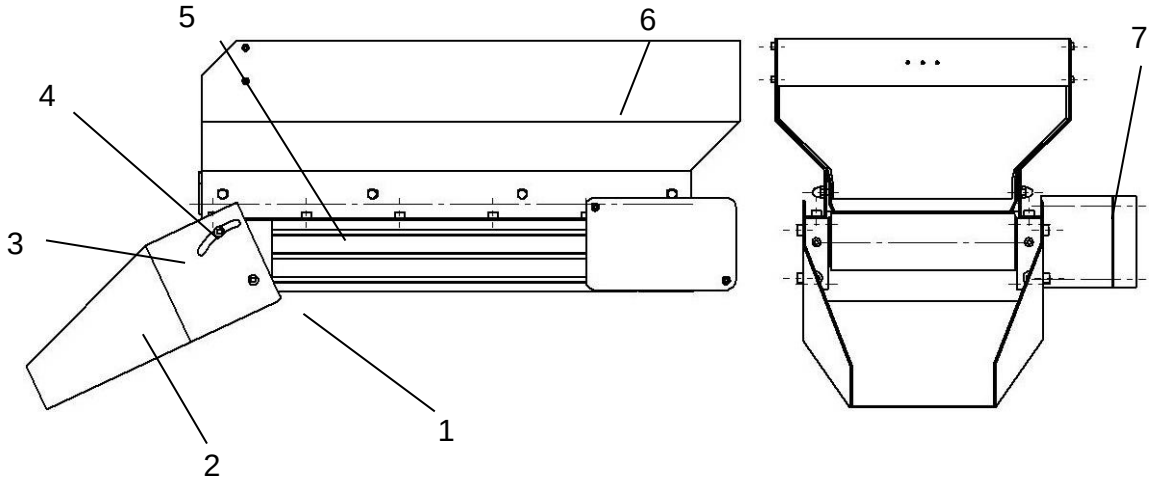

Table 1: *Assembly NBB*

Pos.	Description	Qty
1	Fastening strip	2
2	Tipping chute	1
3	Belt tensioning screw	2
4	Chute clamping screw	2
5	Conveyor belt	1
6	Chute	1
7	Drive unit	1

2.2 Functional description

When the control device on the hopper's drive unit receives the start signal e.g. from the load level indicator of a feeder (load level of a feeder bowl), the hopper conveys the bulk material loaded into the trough via the chute into the feeder. The hopper continues to operate to the point where the control unit receives the stop signal from the load level indicator on the feeder (maximum load level of a bowl feeder).

2.3 Technical data

Table 2: *Technical data*

Description		Units	NBB10	NBB20	NBB30
Usage volume		[l]	10	20	30
Filling weight	Standard (24VDC)	[kg]	20		
	Standard (230VAC)	[kg]			
	heavy duty (230AC)	[kg]	40		
Belt speed		[m/min]	0,13		
Bunker weight		[kg]	19,7	20,1	29

3 Assembly instructions

3.1 Transport

⚠ WARNING

Improper use of transport means (industrial trucks, cranes, technical aids, sling gear etc.) may lead to bruises and other injuries.

Required behaviour:

- **Observe and follow the transport and maintenance instructions**
- **Proper use of transport means**

⚠ CAUTION

During transport, the NBB must only be held by the base.

The chute is not to be held.

3.2 Installing the unit

The hopper, depending upon the intended use and space available, can be bolted on legs direct to the base plate of the feeder or adjacent to the feeder by means of a height-adjustable frame positioned on the floor and appropriately height-adjusted (see chapter 6 Accessories).

NOTE	
!	**In the case of storing parts for vibration feeder units care must be taken to ensure that the parts falling off the chute do not drop onto chicanes thus adversely affecting the function of the device. The parts should be introduced into the vibration feeder more or less at the centre.**

3.3 Power supply

The 230 VAC drive unit may only be powered by 230 V alternating voltage, the connection cable must have a correctly connected PE protective conductor.

Table 3: *Connection to energy supply*

Unit	Voltage / Frequency	Power input [W]
230 VAC Standard	230 V / 50 Hz	23
110 VAC Standard	110 V / 60 Hz	22
230 VAC heavy duty	230 V / 50 Hz	115
110 VAC heavy duty	110 V / 60 Hz	99
24 VDC	24 V	7

Figure 3: *Connection - plan 24 VDC*

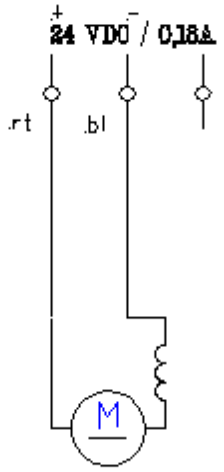

Direct current motor

4 Operating instructions

The item numbers listed below refer to the illustration Figure 2.

4.1 Parts discharge chute

Depending of the particular application (parts, site conditions) you can use a hinged chute (Pos.Nr.2) or a well spout. If the chute is used to feed parts to vibration conveyors, it must be ensured that the parts falling from the chute do not drop onto any baffles as this can have an adverse effect on the equipment's operation. The parts should be fed into roughly the centre of the unit.

- Hinged spout: the incline of the chute can be adjusted by loosening the screws (Item No. 7).
- Well spout nose: non-adjustable

4.2 Regulator curtain

The flow regulation curtain is located at the discharge end of the conveyor belt and serves to prevent excessive numbers of parts falling onto the chute when large loads are in the hopper and the belt is non-operational. In the event that an unhindered flow of large parts is not possible the curtain should be shortened, using a suitable tool, to accomplish an optimized flow of parts.

4.3 Belt tensioning

The belt is tensioned at the factory prior to delivery. Refer to Chapter 5.2 for tensioning instructions.

5 Maintenance instructions

5.1 Cleaning

		Cleaning agent:	Cleaning method:
Conveyor belt:	Polyurethane	Spirit	Clean with a moist cloth
Trough	INOX rough or polished	Pure benzene or Spirit	Ultrasonic bath
	Metaline	Soap water	Clean with moist cloth, let dry
	Polyurethane red Nextel	Pure benzene or spirit	Rub down with moist cloth and let it air dry, must not be filled into the dosing trough. The dosing channel must not be submerged into the cleaning bath
Cover	PET / Macrolon / plexiglass	Vacuum cleaner and anti-static spray	Vacuum before wiping down, spray in with anti-static spray and rub off.

5.2 Conveyor Belt

A weekly check is to be made of the belt tension, and to make sure it is correctly positioned at the centre. If the tension is inadequate, or the belt is off centre, readjust by using the adjuster screws (see Figure 4, item No. 04).It is important, however, that the belt is not tensioned to tightly as this can have an adverse effect on the service life of the bearings. Contamination of the belt should be avoided by cleaning regularly. This course of action will ensure long service life of the system as a whole.

Figure 4: *Conveyor belt with clamping screw*

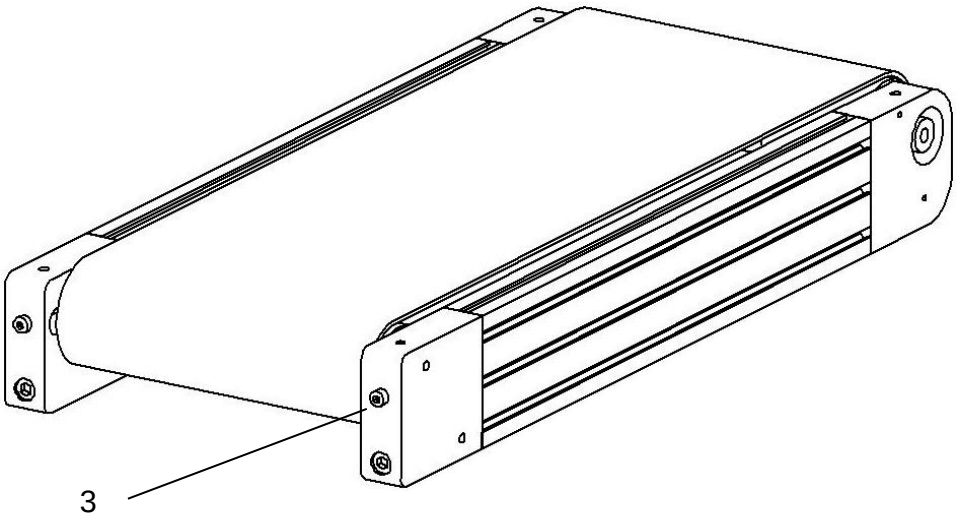

To replace the belt, disconnect the power supply and remove the trough (see Figure 2, item No. 1) the spout (item No. 7) as well as the guard (item No. 06) from the frame (item No. 02). Now completely release the belt on both sides using the tensioning screws (items Nos. 03 and 04). Remove the side wall (item No. 05) of the frame (item No. 05) (frame item No. 02) facing away from the drive side. The side panel (item No. 05) must be removed by pulling it to the front after loosening the screws on the bearing block (item No. 08). The old belt (item No. 09) can now be removed at the side and replaced by a new one. Reassembly is to be effected in reverse order making sure when tensioning the new belt that it runs at the centre position and is adequately tensioned.

5.3 Drive

The worm gear motor is maintenance-free. To change the drive remove the guard on the sprockets and the chain. The drive unit can be completely removed by loosening the screws and replaced by a new one. Carry out reassembly in reverse order. Care should be taken to ensure that the chain is adequately tensioned (refer to sub-section entitled “Chain”).

5.4 Bearings

The drive and deflection roller bearings are maintenance-free. Please contact the manufacturer when changing the bearings (Chapter 6.3).

5.5 Spare parts

Table 5: *Ordering information*

Designation			Order number
Conveyor belt	7,5 l / 10 l / 20 l		50198020
	30L		50198021
Drive unit	24V		50220245
	230 V	Standard	50064190
		Heavy duty	50165934
	115 V	Standard	50220246
		Heavy duty	50220247

6 Accessories

6.1 Mounting parts

Table 4: *List of accessories*

Designation		Order number	Description
Part chute: hinged spout (Standard)		50072064	--
Part chute: well spout	10 l	50045388	--
	20 l	15145722	
	30 l	50050678	
Conveyor belt foot fixed height	150-700 mm	see Afag-Catalogue	Support for screwing the hopper on the floor plate
Pendulum-queries	Sensor	50209209	--
	Cable socket	15072201	--
Refelction detector	Sensor	50204111	--
	Cable socket	15157148	--
	Retainer plate	50229217	--
	Clamping cylinder	15181415	--
	Round 30 mm gra-ding	auf Anfrage	--
Sensor fixuation	Clamp foot	15116039	Sensor fixuation for Pendulum-queries or Refelction detector
	Cross-type clamp	50255610	
	Round 30 mm grading	auf Anfrage	

6.2 Control device

Table 5: *Controllers*

Type	Power supply	Order number	Comment
IRG1-MS	230V/50Hz	50391018	Control with timer function using sen-sors
	115V/60Hz		
MSG801	230V/50Hz – 115V/60Hz	50391818	Control with timer function using sen
MSG802	230V/50Hz - 115V/60Hz	50391819	sors

Third-party controllers can also be used as long as they meet the technical requirements.

6.3 Address for orders

Germany:

Afag GmbH

Wernher-von-Braun-Straße 1

D – 92224 Amberg

Tel.: ++49 (0) 96 21 / 65 0 27-0

Fax: ++49 (0) 96 21 / 65 0 27-490

Sales

sales@afag.com

www.afag.com

Switzerland:

Afag Automation AG

Luzernstrasse 32

CH – 6144 Zell

Tel.: ++41 (0) 62 / 959 86 86

Fax: ++41 (0) 62 / 959 87 87

7 Disposal

Hoppers that are no longer in use should not be disposed of as complete units but dismantled into separate materials and recycled. Non-recyclable components must be disposed of correctly.