Simply faster – Systematic handling

Systems I Actuators I Modules

Application description

Safe limited speed

As at: 2019-06-07

1 Contents

2 Introduction

Note: The machine manufacturer must check in advance that the required PL of the application is achieved with this module.
Please note that the speeds for each application must be calculated individually by the customer taking into account the reaction times.
Under certain circumstances, it may be necessary to use a deadman's switch or even a two-hand release.

The sample program provided is not a finished program suitable for every application. The programming, safety inspection and acceptance of the machine must be carried out by the customer. Afag Hardt GmbH assumes no liability that the components used here will achieve the required PL.

This application description shows how an eps EDP linear motor handling system can be operated at a safely reduced speed.

For each axis to be controlled, a servo controller with an STO input, an external path measuring system and a safety module are required.

In the example application, two speeds are defined for set-up operation. Reduced speed 1 is designed to work directly on the handling and reduced speed 2 is for observation with the safety door open.
The values for the safely reduced speeds were defined here for the Y-axis and Z-axis in the same way.
Reduced speed 2 may only be driven with an additional dead man's switch.
If the safety door is closed, the handling can move at maximum speed.

Safe limited speed 1	1 m/min	0.017 m/s
Safe limited speed 2	2 m/min	0.03 m/s

These speeds were determined for this test application on the basis of empirical values.

3 Explanation of terms

SLS	Safe Limited Speed	Sicher reduzierte Geschwindigkeit
STO	Safe Torque Off	Sichere Drehmomentabschaltung

4 Block diagram

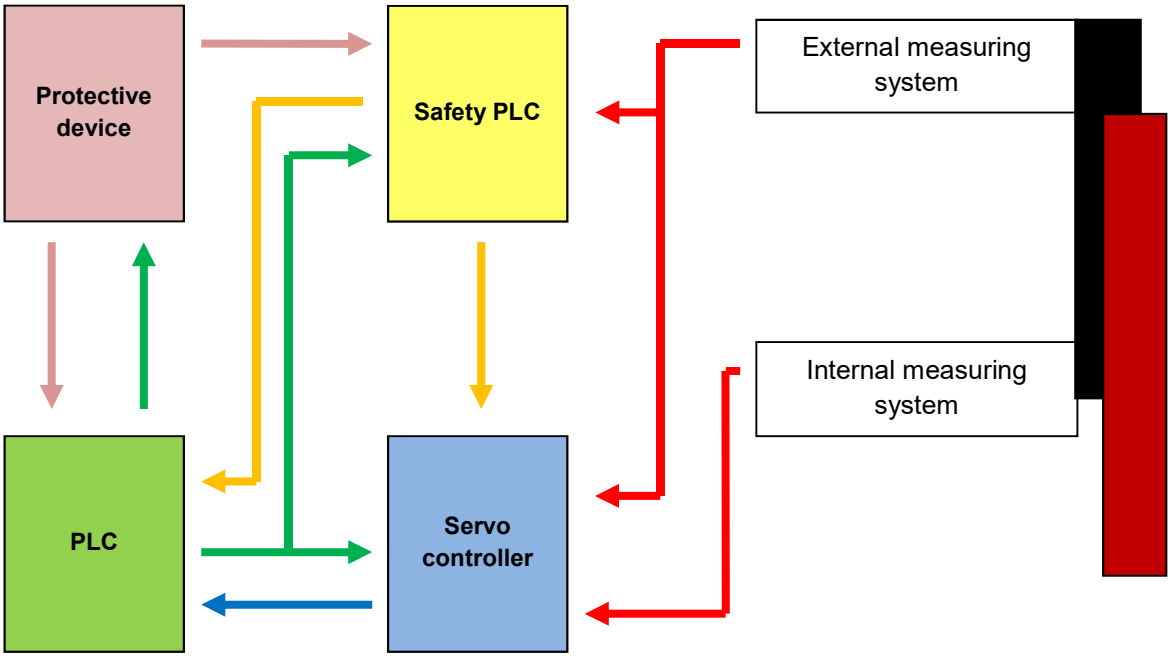

5 How it works

To guarantee that speed is safely limited for setup mode, an additional safety module and additional external measuring system are used.
This safety module monitors the speed of handling with the help of the additional measuring system. If the previously defined maximum set-up speed is exceeded, the safety electronics switches off the release of the controller by means of safe contacts and the STO is triggered at the controller. The safety module monitors all signal channels of the measuring system and compares it with two processors for plausibility.

In addition to the monitoring by the safety module, the controller also compares the values of the internal and external measuring system. If a difference in position is detected, e.g. due to a cable break, the controller disconnects the load circuit via safety contactors.

The safety module also provides standstill monitoring. This can be utilized in various ways, e.g. to release the safety door lock.

6 Components used

6.1 *Safeline safety PLC with*

- Central module DNSL-ZMV 40ZM01
- Field bus module, e.g.
  EtherCAT DNSL-ECV 40EC03
  Profibus DNSL-DPV 40DP04
  Profinet DNSL-PNV 40PN03
  CANopen DNSL-COV 40CO03
- Drive monitoring module DNSL-DSV 2 40DS01 (for 2 axes)
  Note:
  Up to 13 drive monitoring modules (for 26 axes) can be mounted in series

Central Axis monitoring module

Field bus

6.2 *Servo controller C1xx0-xx-XC-1S*

6.3 *Linear path measuring system (for linear axes)*

- Magnetic sensor MSK500 with filter ftaps4 (TTL 5 V)
- Magnetic tape MB500

Alternatively

- Magnetic sensor MSA501 (TTL 5 V)
- Magnetic tape MBA501

- Magnetic sensor MSK1000 with filter ftaps4 (TTL 5 V)
- Magnetic tape MB100

6.4 *Encoder (for SE20)*

- IE3 L with 128 pulses (TTL 5 V)

6.5 *Encoder (for RA-40 and SE30)*

- IE3 L with 512 pulses (TTL 5 V)

7 Configuration and structure

Before a configuration is defined, the speeds must first be known.

Limited speed 1 (f_{Speed1})	1 m/min	0.017 m/s
Limited speed 2 (f_{Speed2})	2 m/min	0.03 m/s

In order to set the speed, the next step is to calculate the maximum frequency generated by the path measuring system while driving.

7.1 *Calculation for linear axes*

7.1.1 Sensor with 0.01 mm resolution

For this, we first need the resolution of the magnetic sensor (here 0.01 mm with 4x evaluation)

$$s = 0{,}00001\ m * 4 = 0{,}00004\ m$$

This creates a period length (s) of 0.00004 m.

The formula below can be used to calculate the frequency.

$$f_{Gesch} = \frac{v\max}{s} \qquad f_{Gesch1} = \frac{0{,}017\, m/s}{0{,}00004\, m} = 425 Hz \qquad f_{Gesch2} = \frac{0{,}03\, m/s}{0{,}00004\, m} = 750\, Hz$$

Since we want to drive at these speeds, we must enter approx. 10 percent more as the tolerance for this speed or frequencies.

$$f_{Gesch} = \frac{v\max}{s} + 10\% \qquad f_{Gesch1} = \frac{0{,}017\, m/s}{0{,}00004\, m} + 10\% = 467{,}5 Hz \qquad f_{Gesch2} = \frac{0{,}03\, m/s}{0{,}00004\, m} + 10\% = 825\, Hz$$

Since the axes also move minimally at ‘standstill’, a tolerance must also be taken into account here. This was set to 10 increments in the example. In environments that transmit strong vibrations to the handling system, this value must be increased so that a standstill can be signaled correctly.

7.1.2 **Sensor with 0.001 mm resolution**

For this, we first need the resolution of the magnetic sensor (here 0.001 mm for 4x evaluation)

$s = 0{,}000001 \ m * 4 = 0{,}000004 \ m$

This creates a period length (s) of 0.000004 m.

The formula below can be used to calculate the frequency.

$$f_{Gesch} = \frac{v\max}{s} \qquad f_{Gesch1} = \frac{0{,}017 \, m/s}{0{,}000004 \, m} = 4250 \, Hz \qquad f_{Gesch\,2} = \frac{0{,}03 \, m/s}{0{,}000004 \, m} = 7500 \, Hz$$

Since we want to drive at these speeds, we must enter approx. 10 percent more as the tolerance for this speed or frequencies.

$$f_{Gesch} = \frac{v\max}{s} + 10\%$$

$$f_{Gesch\,1} = \frac{0{,}017 \, m/s}{0{,}000004 \, m} + 10\% = 4675 \, Hz$$

$$f_{Gesch\,2} = \frac{0{,}03 \, m/s}{0{,}000004 \, m} + 10\% = 8250 \, Hz$$

Since the axes also move minimally at ‘standstill’, a tolerance must also be taken into account here. This was set to 10 increments in the example. In environments that transmit strong vibrations to the handling system, this value must be increased so that a standstill can be signaled correctly.

7.2 *Calculation for rotary axes*

For this, we first need the number of increments of the measuring system and the reduction ratio of the gear of the unit.

7.2.1 **SE20 with 50:1 gear**

The formula below can be used to calculate the frequency.

$$f_{Gesch} = \frac{Ink * i * v_{\max}}{360°}$$

$$f_{Gesch\,1} = \frac{128 * 50 * 17°/s}{360°} = 302{,}2\,Hz \qquad f_{Gesch\,2} = \frac{128 * 50 * 30°/s}{360°} = 533{,}3\,Hz$$

Since we want to drive at these speeds, we must enter approx. 10 percent more as the tolerance for this speed or frequencies.

$$f_{Gesch} = \frac{Ink * i * v_{\max}}{360°} + 10\%$$

$$f_{Gesch\,1} = \frac{128 * 50 * 17°/s}{360°} + 10\% \approx 335\,Hz \qquad f_{Gesch\,2} = \frac{128 * 50 * 30°/s}{360°} + 10\% \approx 590\,Hz$$

Since the axes also move minimally at ‘standstill’, a tolerance must also be taken into account here. This should be set to 34 Hz (approx.10% of reduced speed 1 (f_{Speed1})). In environments that transmit strong vibrations to the handling system, this value must be increased so that a standstill can be signaled correctly.

7.2.1 **SE20 with 30:1 gear**

The formula below can be used to calculate the frequency.

$$f_{Gesch} = \frac{Ink * i * v_{\max}}{360°}$$

$$f_{Gesch\,1} = \frac{128 * 30 * 17°/s}{360°} = 181{,}3\,Hz \qquad f_{Gesch\,2} = \frac{128 * 30 * 30°/s}{360°} = 320\,Hz$$

Since we want to drive at these speeds, we must enter approx. 10 percent more than tolerance for this speed or frequencies.

$$f_{Gesch} = \frac{Ink * i * v_{\max}}{360°} + 10\%$$

$$f_{Gesch\,1} = \frac{128 * 30 * 17°/s}{360°} + 10\% \approx 200\,Hz \qquad f_{Gesch\,2} = \frac{128 * 30 * 30°/s}{360°} + 10\% \approx 350\,Hz$$

Since the axes also move minimally at ‘standstill’, a tolerance must also be taken into account here. This should be set to 20Hz (approx.10% of reduced speed 1 (f_{Speed1})). In environments that transmit strong vibrations to the handling system, this value must be increased so that a standstill can be signaled correctly.

7.2.2 **RA-40 and SE30 with 50:1 gear**

The formula below can be used to calculate the frequency.

$$f_{Gesch} = \frac{Ink * i * v_{\max}}{360°}$$

$$f_{Gesch\,1} = \frac{512 * 50 * 17° / s}{360°} = 1208{,}88\,Hz \qquad f_{Gesch\,2} = \frac{512 * 50 * 30° / s}{360°} = 2133{,}33\,Hz$$

Since we want to drive at these speeds, we must enter approx. 10 percent more than tolerance for this speed or frequencies.

$$f_{Gesch} = \frac{Ink * i * v_{\max}}{360°} + 10\%$$

$$f_{Gesch\,1} = \frac{512 * 50 * 17° / s}{360°} + 10\% \approx 1330\,Hz \qquad f_{Gesch\,2} = \frac{512 * 50 * 30° / s}{360°} + 10\% \approx 2350\,Hz$$

Since the axes also move minimally at ‘standstill’, a tolerance must also be taken into account here. This should be set to 130 Hz (approx.10% of reduced speed 1 (f_{Speed1})). In environments that transmit strong vibrations to the handling system, this value must be increased so that a standstill can be signaled correctly.

7.2.3 **RA-40 and SE30 with 30:1 gear**

The formula below can be used to calculate the frequency.

$$f_{Gesch} = \frac{Ink * i * v_{\max}}{360°}$$

$$f_{Gesch\,1} = \frac{512 * 30 * 17° / s}{360°} = 725{,}33\,Hz \qquad f_{Gesch\,2} = \frac{512 * 30 * 30° / s}{360°} = 1280\,Hz$$

Since we want to drive at these speeds, we must enter approx. 10 percent more than tolerance for this speed or frequencies.

$$f_{Gesch} = \frac{Ink * i * v_{\max}}{360°} + 10\%$$

$$f_{Gesch\,1} = \frac{512 * 30 * 17° / s}{360°} + 10\% \approx 800\,Hz \qquad f_{Gesch\,2} = \frac{512 * 30 * 30° / s}{360°} + 10\% \approx 1410\,Hz$$

Since the axes also move minimally at ‘standstill’, a tolerance must also be taken into account here. This should be set to 80 Hz (approx.10% of reduced speed 1 (f_{Speed1})). In environments that transmit strong vibrations to the handling system, this value must be increased so that a standstill can be signaled correctly.

7.3 *Settings of SL-VARIO Designer*

The settings are made using the SL-VARIO Designer software.

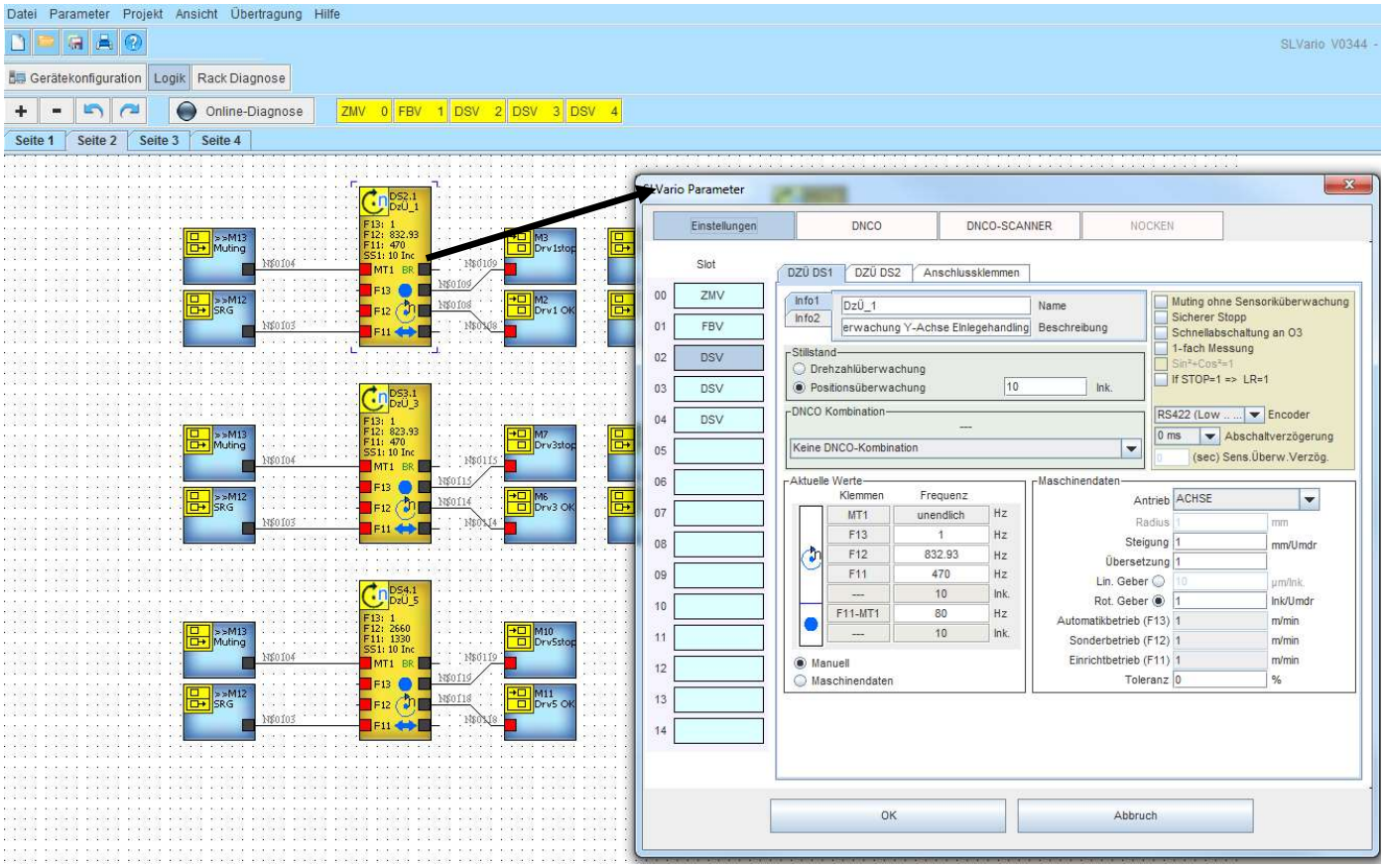

Note: After they are transferred, the frequencies are automatically changed. This comes from the frequency of the integrated quartz crystal.

8 Information about wiring

The different cards are connected directly with each other using special plug connectors. These plug connectors are used to realize the power supply of the individual modules and the communication with the central module.

8.1 *Power supply of the safety PLC*

Central module
A1 = 24 V/DC
A2 = GND

Speed card
P24V = 24 V/DC

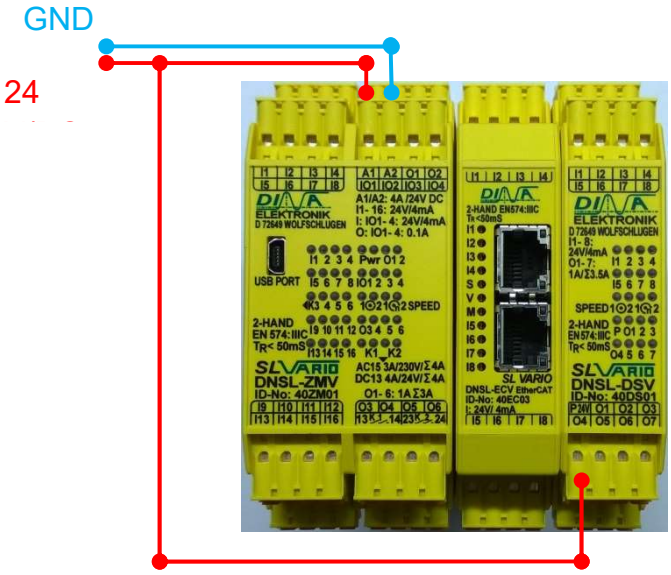

8.2 *Emergency stop circuit*

Central module

IO3	Emergency stop, clock output 1	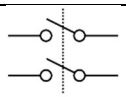	IN7	Input 1 for emergency stop
IO4	Emergency stop, clock output 2		IN8	Input 2 for emergency stop

If the contacts are not needed, they can also be bridged directly.

8.3 *Safety door circuit*

Central module

IO1	Safety door, clock output 1	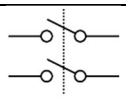	IN5	Input 1 for safety door
IO2	Safety door, clock output 2		IN6	Input 2 for safety door

If the contacts are not needed, they can also be bridged directly.

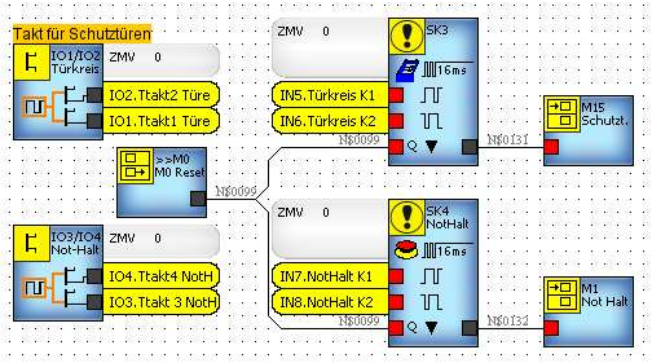

8.4 *Safe Torque Off (STO)*

To ensure safety at reduced speed, it is important that the drive is switched off safely (STO). Therefore, it is important to use a double contact as shown in the connection diagram.
The connection diagrams show 2 variants of how to wire the STO circuit.

8.4.1 STO triggering for axes (Variant 1)

To trigger the STO for all axes simultaneously as soon as a safety violation occurs, the following connection diagram must be used.

Central module			Servo controller	
Q13	24 V			
Q14	X33.8		X33.8	Q14
Q23	24 V			
Q24	X33.4		X33.4	Q24
			X33.7	GND
			X33.3	GND

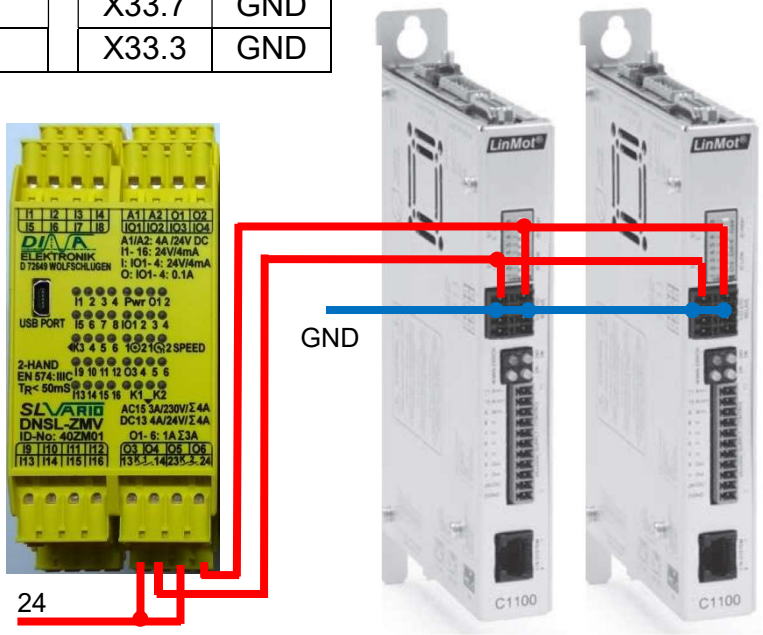

8.4.2 STO triggering for a single axis (Variant 2)

The following connection diagram can be used to trigger the STO for individual axes as soon as a safety violation of the respective axis occurs.

Speed module			Servo controller 1			Servo controller 2	
Q4	X33.8(1)		X33.8	Q4			
Q5	X33.4(1)		X33.4	Q5			
Q6	X33.8(2)					X33.8	Q6
Q7	X33.4(2)					X33.4	Q7
			X33.7	GND			
			X33.3	GND			

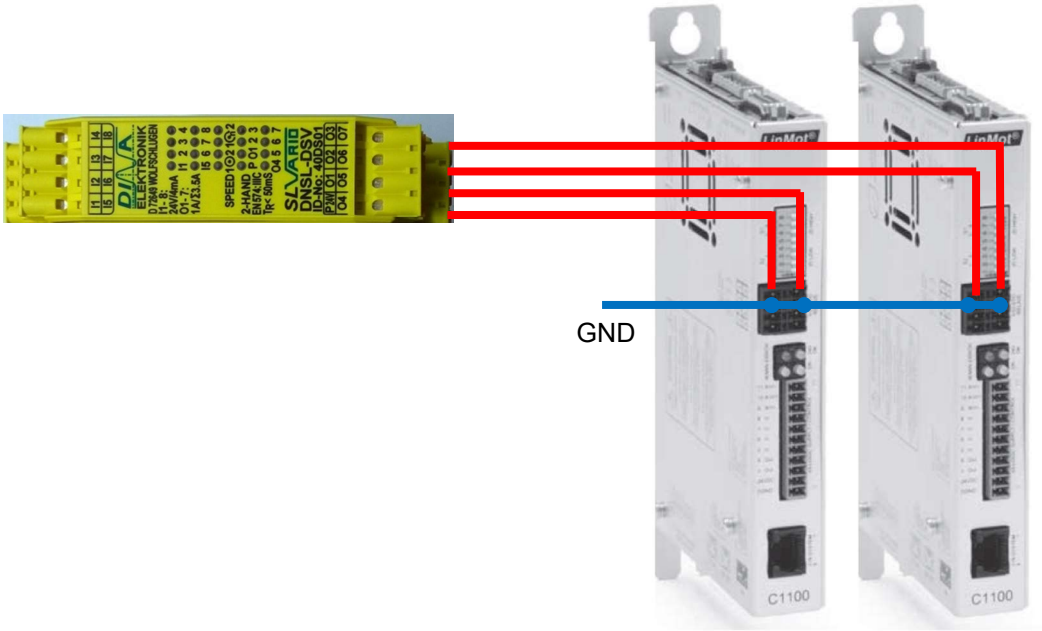

8.5 *Path measuring system*

For the path measuring system, it is recommended to use the standard cable adapters. They split the signal lines of the path measuring system so that the signals are applied to both the servo controller and the safety PLC.

The cable adapter has 3 connections (Sub-D plug, 15-pin / Sub-D socket, 15-pin / RJ45 plug). It is connected directly to the servo controller with the Sub-D connector, to X13 of the servo controller. The magnetic sensor is plugged into the Sub-D socket. The RJ45 connector is connected to DS1 or DS2 of the respective speed card.

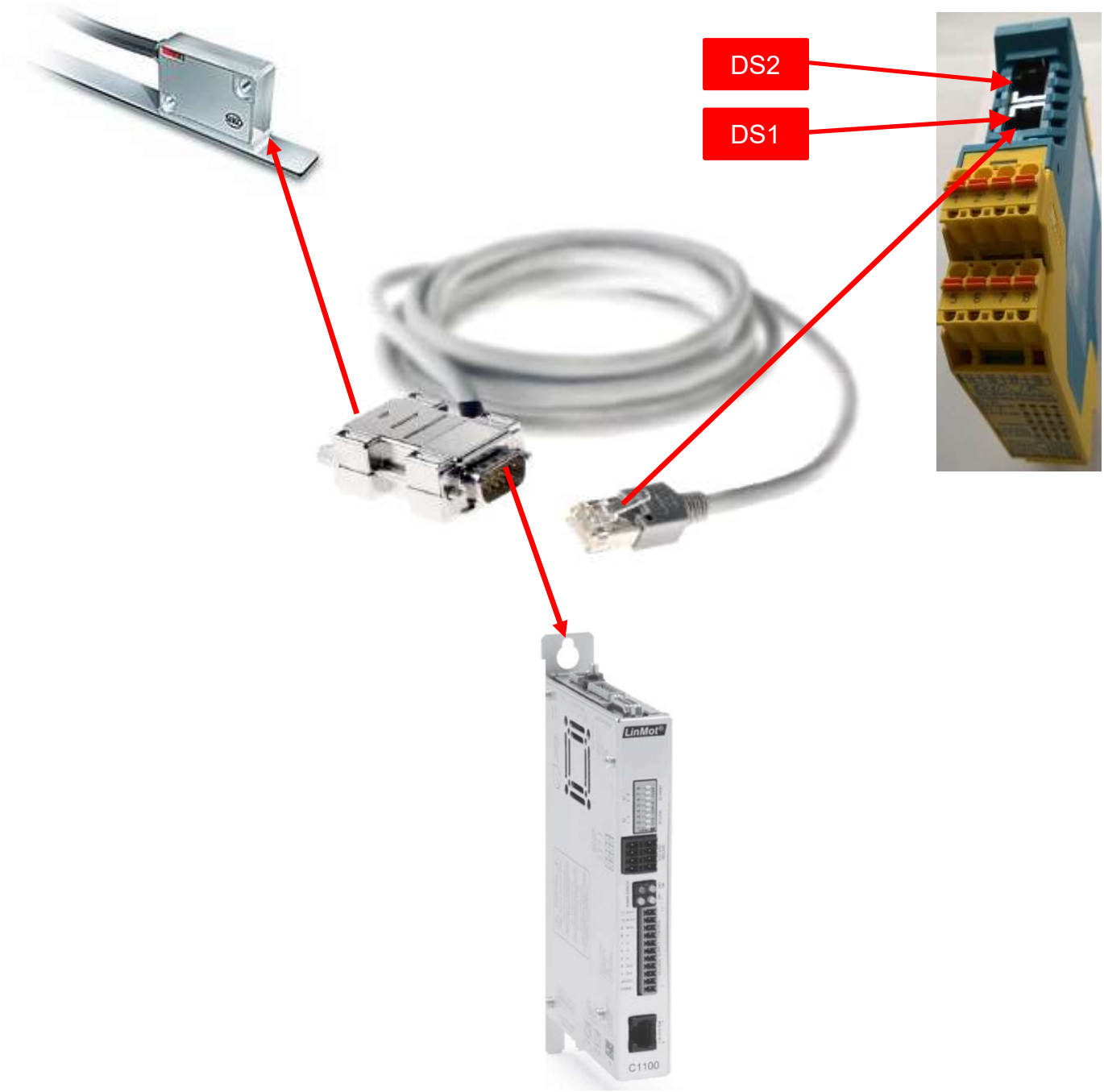

Connection diagram

9 Operation

9.1 *Selecting the operating mode*

In our example, three operating modes are used: Reduced speed 1, reduced speed 2, and automatic mode (no monitoring of the speed).
The IN1, IN2 and IN3 inputs are available on the central module to select the respective operating modes. The inputs are activated by the 24 V connection.
The table below shows how to select which operating mode.

Inputs			Operating mode
IN1	IN2	IN3	
	x		SLS 1
		x	SLS 2
x			Automatic mode

(24 V is always applied to X)

9.2 *Switching between the operating modes*

To achieve a safe operating state, the SLS must be selected with the safety door open. Otherwise, the STO is automatically triggered at the servo controller and the axis is therefore de-energized.

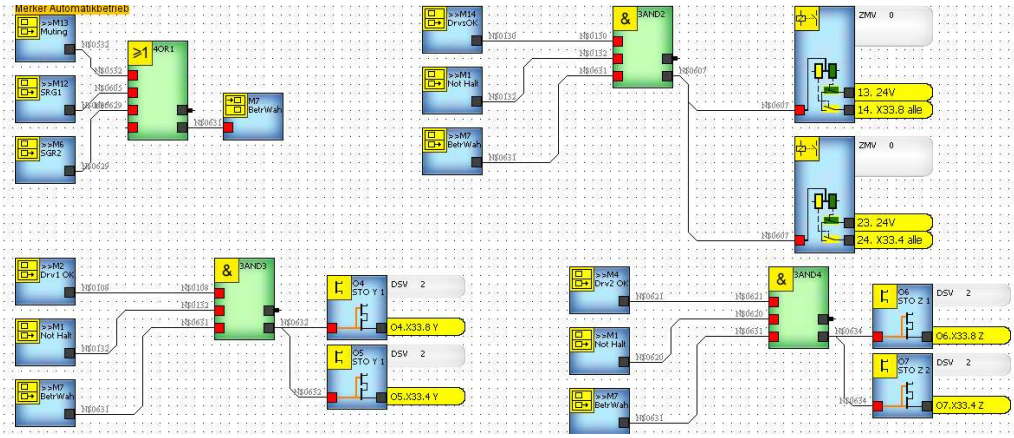

If required, the changeover from automatic to SLS can be delayed via the timers.

It must be noted that the SLS is only active after the times ZW3/ZW1 have elapsed.
This may give rise to potential problems:

Times too long: Safe operation cannot be guaranteed

Times too short: Axles cannot be braked fast enough to the safe speed → Violation of the SLS → STO → Axles are de-energized.

The time ZW2 should always be set approx. 10% higher than ZW1/3/4.

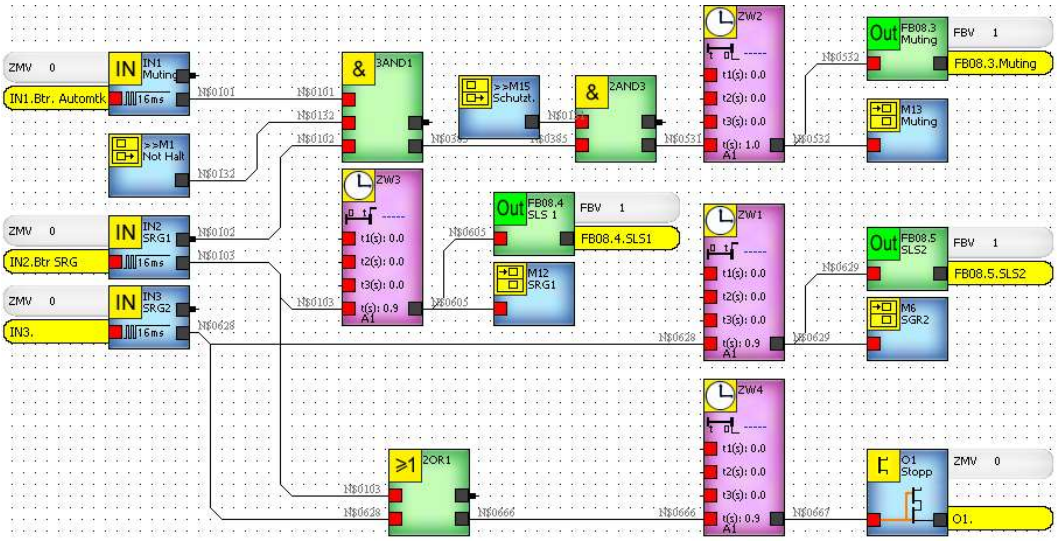

9.2.1 Important information

1. In automatic mode, the emergency stop circuit and the safety door circuit must be closed
2. In SLS mode, the emergency stop circuit must be closed
3. If an enabling switch is used, it must also be actuated when switching to SLS operation. If this is not actuated, this automatically leads to an STO.
4. Braking can be implemented using a corresponding run command via the PLC. For example, an absolute run command can be sent with the same target position and limited speed, acceleration and deceleration.

   Alternatively, the /Abort function (control word) can be used. This function is then assigned to a digital input of the servo controller. This function completely decelerates the axle, but then the control remains active.
   The /Quickstop should <u>not</u> be used, as it automatically leads to an STO.
   Note: The digital inputs on the controller are not safe inputs!

9.3 *Resetting the safety PLC*

If an error has occurred, e.g. due to exceeding the speed, the safety PLC requires a reset.
This can be carried out either via the IN4 input on the central module or via the field bus (FBI1.1).
If you do not want to carry out a reset, but want the safety PLC to carry it out automatically, you can set the IN4 input to 24 V. However, no errors are output during an automatic reset.

Reset	IN4 central module	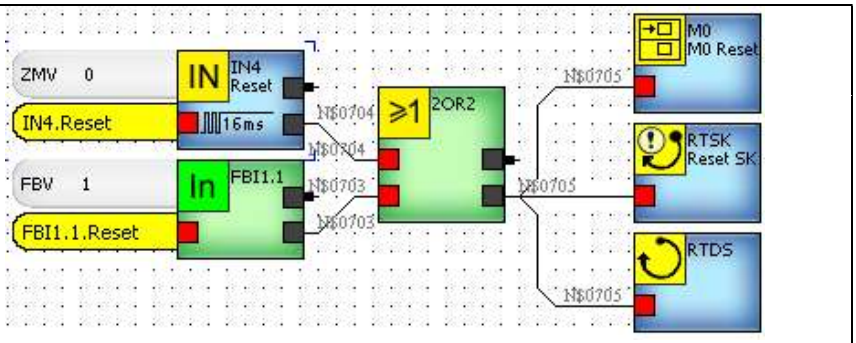
Reset	Field bus input FBI1.1	

9.4 *Display of the operating state*

Digital outputs

Central module				Axis monitoring module		
Q1	Stop for changeover from automatic to SLS (Abort)			Q1	Standstill, axis 1	
Q2	Standstill			Q4/5	Axis 1 OK	
Q3	Error			Q2	Standstill, axis 2	
				Q6/7	Axis 2 OK	
				Attention! If you use the " STO triggering for a single axis " variant, the input of your PLC must be protected against inductive loads.		

10 Field bus assignment – input/output

10.1 *Input bytes*

FBI1.1	Reset
FBI1.2	Free
FBI1.3	Free
FBI1.4	Free
FBI1.5	Free
FBI1.6	Free
FBI1.7	Free
FBI1.8	Free

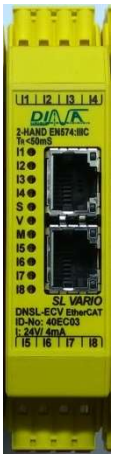

All other input bytes are not occupied.

10.2 *Output bytes*

FBO1.1	Error, axis 1		FBO2.1	Error axis 9
FBO1.2	Error, axis 2		FBO2.2	Error, axis 10
FBO1.3	Error, axis 3		FBO2.3	Error, axis 11
FBO1.4	Error, axis 4		FBO2.4	Error, axis 12
FBO1.5	Error, axis 5		FBO2.5	Error, axis 13
FBO1.6	Error, axis 6		FBO2.6	Error, axis 14
FBO1.7	Error, axis 7		FBO2.7	Error, axis 15
FBO1.8	Error, axis 8		FBO2.8	Error, axis 16
FBO3.1	Error, axis 17		FBO4.1	Standstill, axis 1
FBO3.2	Error, axis 18		FBO4.2	Standstill, axis 2
FBO3.3	Error, axis 19		FBO4.3	Standstill, axis 3
FBO3.4	Error, axis 20		FBO4.4	Standstill, axis 4
FBO3.5	Error, axis 21		FBO4.5	Standstill, axis 5
FBO3.6	Error, axis 22		FBO4.6	Standstill, axis 6
FBO3.7	Error, axis 23		FBO4.7	Standstill, axis 7
FBO3.8	Error, axis 24		FBO4.8	Standstill, axis 8
FBO5.1	Standstill, axis 9		FBO6.1	Standstill, axis 17
FBO5.2	Standstill, axis 10		FBO6.2	Standstill, axis 18
FBO5.3	Standstill, axis 11		FBO6.3	Standstill, axis 19
FBO5.4	Standstill, axis 12		FBO6.4	Standstill, axis 20
FBO5.5	Standstill, axis 13		FBO6.5	Standstill, axis 21
FBO5.6	Standstill, axis 14		FBO6.6	Standstill, axis 22
FBO5.7	Standstill, axis 15		FBO6.7	Standstill, axis 23
FBO5.8	Standstill, axis 16		FBO6.8	Standstill, axis 24
FBO7.1	Free		FBO8.1	Error
FBO7.2	Free		FBO8.2	Standstill of all axes
FBO7.3	Free		FBO8.3	Muting input status
FBO7.4	Free		FBO8.4	Limited speed 1 input status
FBO7.5	Free		FBO8.5	Limited speed 2 input status
FBO7.6	Free		FBO8.6	Free
FBO7.7	Free		FBO8.7	Free
FBO7.8	Free		FBO8.8	System OK

11 SL-VARIO Designer software

The safety PLC is programmed with the SL-VARIO Designer software – V0344 that is supplied free of charge.
This description is only intended as a rough guide. A detailed description can be found on the CD supplied by the manufacturer and on the flash drive in the central module.

Note:
In order to perform an online diagnosis of the program, the version stored on the PC must be identical to that on the safety PLC.

11.1 *System prerequisites*

- Operating system: Windows XP, Windows Vista, Windows 7, Windows 8 (only after consultation with DINA)
- Main memory: min. 512 MB
- JAVA Runtime Environment (JRE): Min. version 6, Update 16
- USB port
- Connecting cable: To establish a connection to the central module, a conventional USB cable (A plug to B mini plug) is required. This is connected to the mini USB socket labeled ‘USB PORT’.

11.2 *Setting the interface*

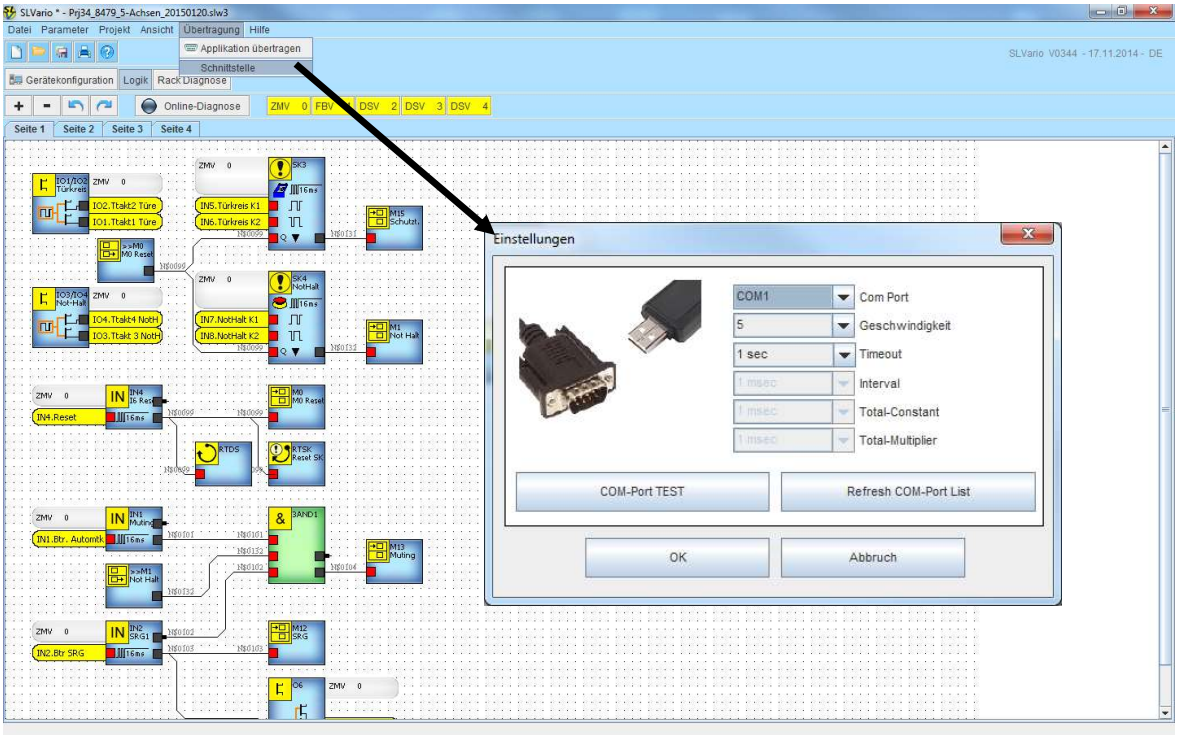

11.3 *Transferring the program/settings*

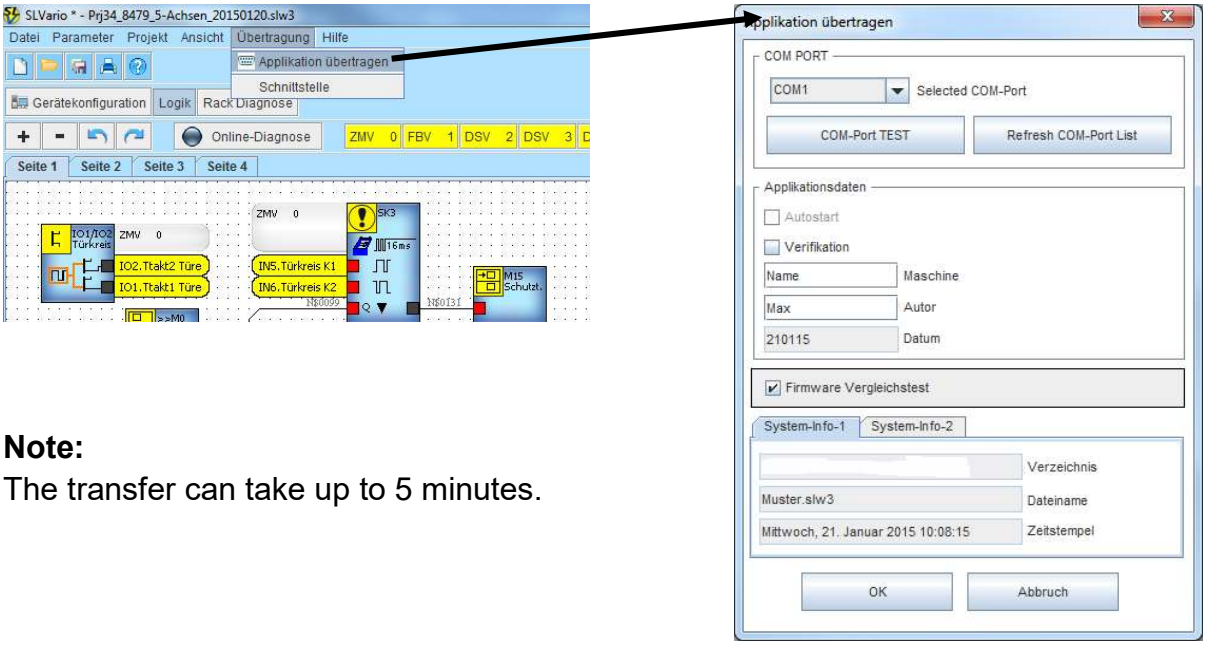

Note:
The transfer can take up to 5 minutes.

11.4 *Setting the field bus address*

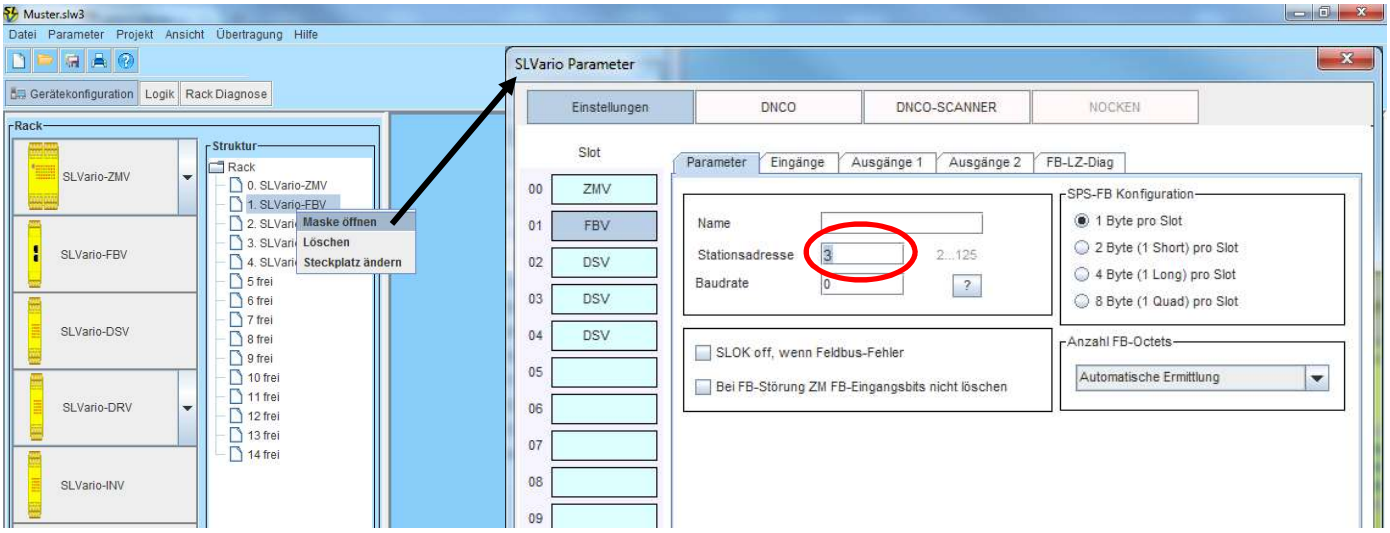

12 Please note

Depending on the mode, motor used and wiring, there can be different response times. The safety module requires approx. 11 ms from detection of the excessive speed to the falling edge at the output with ‘1x measurement’ and active rapid switch-off directly in the speed monitoring module (semiconductor output Q3). If the relay contact on the central module is used, this time increases accordingly.
The time until the STO relay on the controller itself drops out must also be taken into account in the customer's safety consideration, and is between 3 ms and 20 ms depending on the external wiring.

13 Achievable performance level

The redundant design and monitoring of all safety-relevant components and the speed monitoring on the safety PLC ensure one-fault safety.
This enables required performance level ‘d’ to be achieved.
The wiring must be implemented as shown in the following wiring diagram.

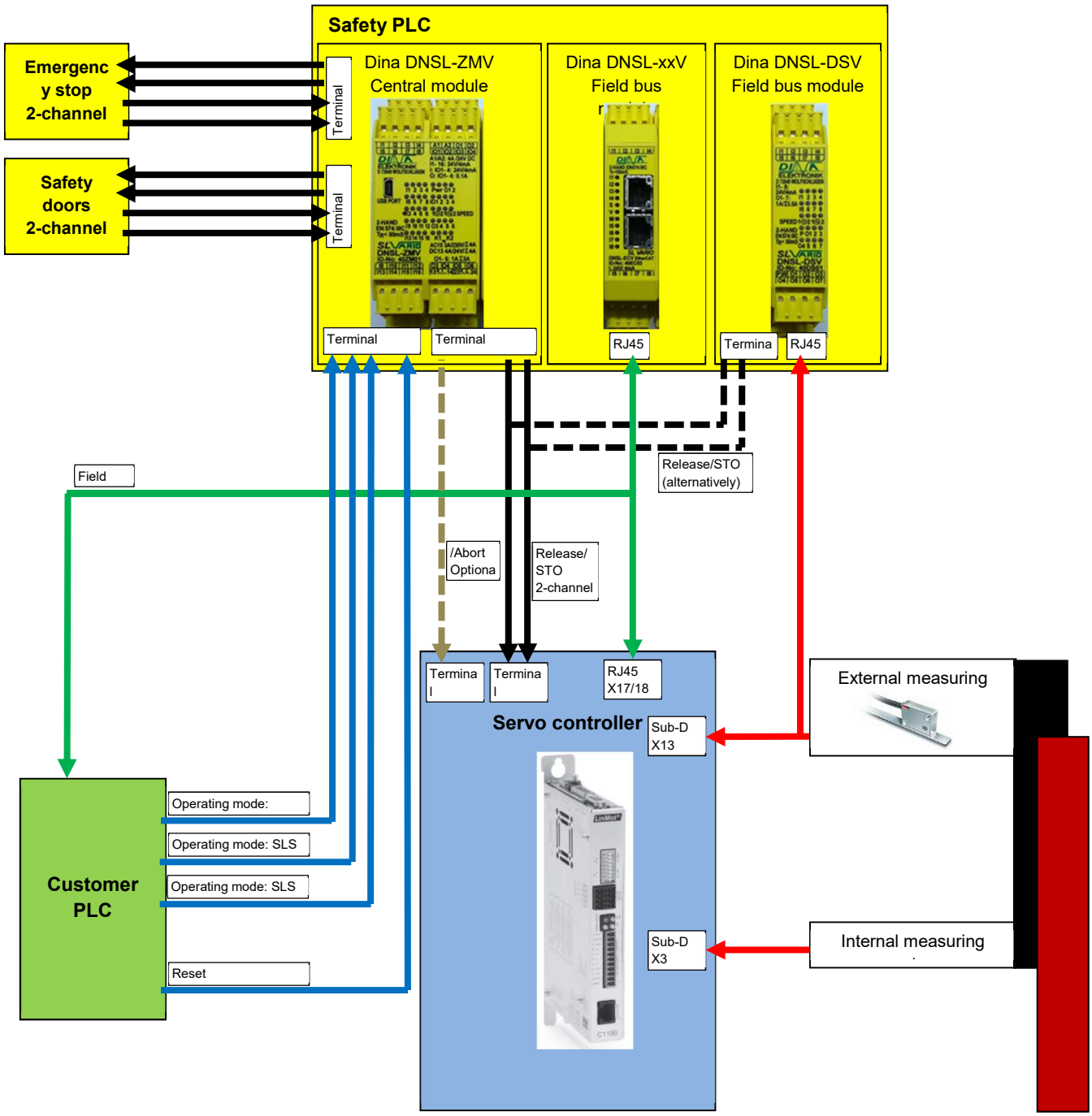

☐ Dies ist eine Zeile Text zum nicht ausgerichtet werden. Möglicherweise wurde die Datei verschoben, umbenannt oder gelöscht. Stellen Sie sicher, dass die Verknüpfung auf die korrekte Datei und den korrekten Speicherort zeigt.

14 Notes

15 Support

Afag Hardt GmbH
Gewerbestraße 11
D-78739 Hardt, Germany
Phone +49 (0)7422/56003-20
E-mail support.hardt@afag.com
Internet http://www.afag.com

Afag Hardt GmbH
Gewerbestraße 11
D-78739 Hardt, Germany
Phone +49 (0)7422/56003-0
Telefax +49 (0)7422/56003-29
E-mail info.hardt@afag.com
Internet http://www.afag.com