Servo Controller
SE-24

- **Operating Instructions**

Operating manual

These operating instructions apply to:

Servo Controller	Order No.
SE-24 I/O	50315434
SE-24 Profibus	50315435
SE-24 EtherCAT	50315436
SE-24 CANopen	50315437
Accessories	**Order No.**
Programming cable SE-24, 3m	50315431
SE-24 Stick	50315432
I/O cable SE-24, 5m	50312913
Power cable SE-24/SE-48, 5m	50118124
Brake release switch SE-24	50315438

Assembly and initial start-up may be carried out by qualified personnel only and according to these operating instructions.

⚠ **CAUTION**	
	Complementary documents are available for the different models. Please pay attention to the notes in *2.1 Documentation*

Symbols:

DANGER	
	Indicates imminent danger. Disregard of this information can result in death or serious personal injuries (invalidity).

WARNING	
	Indicates a possible dangerous situation. Disregard of this information can result in death or serious personal injuries (invalidity).

CAUTION	
	Indicates a possibly dangerous situation. Disregard of this information can result in damage to property or light to medium personal injuries.

NOTE	
	Indicates general notes, useful operator tips and operating recommendations which don't affect safety and health of the personnel.

Inhaltsverzeichnis

List of Figures

List of Tables

1 Declaration of Incorporation

Manufacturer:	Afag Automation AG Luzernstrasse 32 CH-6144 Zell Schweiz
Person established within the Community who is authorised to compile the relevant technical documents:	Niklaus Röthlisberger Produkte-Manager Afag Automation AG Luzernstrasse 32 CH-6144 Zell Schweiz

Description and identification of the partly complete machinery:

Product	Servo controller SE-24
Types	SE-24 I/O / SE-24 Profibus / SE-24 EtherCAT / SE-24 CANopen

The designated products are in conformance with the regulations of the following European Directives.

Number	**2004/108/EC**
Text	Electromagnetic Compatibility
Applied harmonized standards	IEC / EN 61000-6-2 IEC / EN 61000-6-4

Important information

Servo controllers are **no** products in the sense of the EC Machinery Directive.

The servo controllers may only be used in machines or systems after the manufacturer of the machine or system has guaranteed the CE conformity of the overall machine or system.

According to the EMC Directive, the devices mentioned are no products which can be operated as stand-alone products. Compliance with the directive requires correct installation of the products, adherence to the specific installation notes and the product documentation.

Zell, 31.05.2023

Adrian Fuchser	Klaus Bott
CEO Afag Gruppe	*CTO Afag Gruppe*

2 General

2.1 Documentation

For the Servo Controllers of the SE-24 series are considerably documentations available. There are main documents and complementary documents.

The documents contain safety instructions that must be followed

Main document:

present	documentation / description
☒	▪ **SE-24 Operating Manual** Description of the technical data and the functions of the device as well as notes on the plug assignment, installation and operation of the SE-24 servo controller. It is meant for persons who want to get familiar with the SE-24 servo controller.

⚠ **CAUTION**	
	**The operating manual is the main document and must be read by all means before installation and start-up of all devices of the SE-24 series independent of the respective model.**

Complementary documents to the operating manual:

present	documentation / description
☐	▪ **SE-24 Software Manual** Description of the “afagTools” parameterization program.
☐	▪ **SE-24 IO Manual** Description of the I/O control of the SE-24 servo controller.
☐	▪ **SE-24 Profibus Manual** Description of the fieldbus control of the SE-24 servo controller under PROFIBUS-DP.
☐	▪ **SE-24 programming example Siemens S7 V5.5** Description to the programming example for Siemens S7 V5.5.
☐	▪ **SE-24 programming example Siemens TIA V12.0** Description to the programming example for Siemens TIA V12.0.
☐	▪ **SE-24 EtherCAT Manual** Description of the fieldbus control of the SE-24 servo controller under EtherCAT.
☐	▪ **SE-24 programming example Beckhoff TwinCAT 2** Description to the programming example for Beckhoff TwinCAT 2.
☐	▪ **SE-24 CANopen Manual** Description of the fieldbus control of the SE-24 servo controller under CANopen.

These documents are available for download on our homepage:

www.afag.com

3 Safety instructions for electrical drives and controllers

3.1 General instructions

NOTE	
	In the case of damage owing to disregard of the warning notices in this operating manual Afag will not accept any liability.

If the documentation in the language that has been supplied is not easily understood, please ask and inform the supplier.

The faultless and safe operation of the servo controller presupposes an appropriate and professional transport, storage, mounting and installation as well as careful operation and servicing. Only educated and trained personnel must be deployed for handling electrical equipment:

EDUCATED AND QUALIFIED PERSONNEL in the meaning of this product manual or the warning instructions on the product itself, are those persons who are familiar with the installation, the assembly, commissioning and operation of the product as well as with all the warnings and precautionary measures according to the operating instructions in this product manual and have the necessary qualifications corresponding to their activity:

- Training and instruction or authorization to switch on and off devices/systems in accordance with the standards of safety engineering, to ground them and to mark them meaningfully according to the work instructions.
- Training or instruction according to the standards of safety engineering in the maintenance and use of the proper safety equipment.
- Training in First Aid.

The following notes must be read before the initial start-up of the system for avoiding bodily injuries and/or damage to property:

WARNING	
	These safety instructions must be complied with at all times.

NOTE	
	Do not attempt to install or commission the servo controller before you have carefully read all the safety instructions for electrical drives and controllers in this document. These safety instructions and all other user instructions must be read before any work on the servo controller.

NOTE	
	Should you not have access to any of the user instructions for the servo controller, please contact the responsible sales representative. Demand immediate dispatch of these documents to the person(s) responsible for the safe operation of the servo controller.

NOTE	
	In case of sale, lending and/or other form of transfer of the servo controller, these safety instructions must also be handed over.

NOTE	
	Opening of the servo controller by the owner/operator is not permitted for reasons of safety and warranty.

NOTE	
	The precondition for trouble-free working of the servo controller is a technically sound planning.

⚠ CAUTION	
	Improper handling of the servo controller and disregard of the warning instructions given in this manual or improper interventions in the safety devices can result in damage to property and personal injuries.

3.2 Dangers from improper use

⚠ CAUTION	
	The surfaces of the machine housing may be hot. Danger of injury! Danger of burns!

⚠ CAUTION	
	**Movements that cause danger!** Danger to life, serious bodily injury or damage to property from unintentional movements of the motors!

3.3 Safety instructions

3.3.1 General safety instructions

CAUTION	
	The servo controller corresponds to protection class IP65. Make sure that the environment corresponds to this protection class.

CAUTION	
	Use only accessories and spare parts that have been approved by the manufacturer.

CAUTION	
	It must be possible to connect the servo controller and the power supplies used to the mains supply according to the EN-standards and VDE specifications in such a way that they can be isolated from the mains using suitable isolating devices (e.g. main switch, contactors, power circuit breakers).

NOTE	
	As a precaution, interference suppression measures must be taken for the switchgear, e.g. contactors and relays with RC-elements or diodes.

NOTE	
	The safety specifications and regulations of the country in which the device is to be used must be followed.

CAUTION	
	The ambient conditions specified in the product documentation must be complied with. Safety-critical applications are not allowed until they are expressly approved by the manufacturer.

NOTE	
	The notes for EMC-compliant installation can be taken from *chapter 11 Notes on the safe and EMC-compliant installation* in this operating manual. The compliance with the limiting values specified by the national specifications is the responsibility of the manufacturer of the system or machine.

CAUTION	
	The technical data, the connection and installation conditions for the servo controller can be taken from this operating manual and must be complied with by all means.

CAUTION	
	The general installation and safety specifications for the work on power installations (e.g. DIN, VDE, EN, IEC or other national or international specifications) must be observed. Disregard can result in death, bodily injuries or considerable damage to property.

NOTE	
	Without any claims to completeness, the following specifications shall apply: ▪ VDE 0100 Regulation for the mounting of power installations up to 1,000 volt ▪ EN 60204 Electrical equipment of machines ▪ EN 50178 Electronic equipment for use in power installations

3.3.2 Safety instructions for installation and maintenance

For the installation and maintenance of the system, the relevant DIN, VDE, EN and IEC specifications, as well as all national and local safety and accident prevention regulations apply in any case. The system manufacturer or the owner/operator must ensure compliance with these regulations:

⚠ CAUTION	
	The operation, maintenance and/or repairs to the servo controller may only be carried out by personnel who are trained and qualified to work on electrical devices.

Avoiding accidents, bodily injuries and/or damage to property:

CAUTION	
	Additionally secure vertical axes against dropping or lowering after switching off the motor, such as by: ▪ mechanical interlocking of the vertical axis, ▪ external braking/ catching/ clamping device or ▪ sufficient weight balancing of the axis. The motor brake installed or an external motor brake controlled by the drive control unit alone is not suitable for personnel safety!

CAUTION	
	Render the electrical equipment free of voltage via the main switch and secure it against being switched on again, wait until the intermediate circuit has been discharged during: ▪ maintenance work and repairs ▪ cleaning work ▪ long operational downtimes Before carrying out any maintenance work, it must be ensured that the power supply has been switched off, locked and that the intermediate circuit has been discharged.

NOTE	
	It must also be ensured that the external voltage supply of the controller (24 V) is switched off.

NOTE	
	The intermediate circuit or the mains voltage must always be switched off before the 24V voltage supply of the controller is switched off.

⚠ CAUTION	
	Work in the vicinity of the machine must always be carried out with the AC or DC voltage supply switched off and the switches locked. Output stages or controller releases that are switched off are no suitable locking devices. In case of a fault, this may result in an unintended movement of the drive.

⚠ CAUTION	
	The commissioning must be carried out with coasting motors to avoid mechanical damage, e.g. owing to a wrong direction of rotation.

⚠ CAUTION	
	Electronic devices are basically not fail-safe. It is the responsibility of the user to ensure that upon failure of the electrical device, his system is taken into a safe state.

⚠ CAUTION	
	The servo controller can reach high temperatures and may cause heavy burns when touched.

3.3.3 Protection through protective low voltage (PELV) against electrical shocks

All connections and terminals with voltages from 0 to 50 V at the servo controller are protective low voltages that are made with safe contacts according to the following standards:

- International: IEC 60364-4-41
- European countries in the EC: EN 50178/1998, Section 5.2.8.1

WARNING	
	High electrical voltage owing to wrong connection! Danger to life, danger of injury from an electrical shock! The connection values for the voltages at the connections for the electronics U_e supply voltage and the U_P power specified in the technical data must not be exceeded.

Only those devices, electrical components and cables, which have a protective low voltage (PELV = Protective Extra Low Voltage) may be connected to all connections and terminals with voltages from 0 to 50 volt. Connect or apply only such voltages or electrical circuits that are safely isolated from dangerous voltages. Safe isolation is achieved, for example, by isolation transformers, safe opto-couplers or mains-free battery operation.

3.3.4 Protection against dangerous movements

Dangerous movements can be caused by erroneous control of the connected motors. The causes can be of the most varied kinds:

- untidy or faulty wiring or cabling
- error during the operation of the components
- error in the measuring and signal transmitters
- faulty or non-EMC conformant components
- error in the software in the higher-level control system

These faults can occur immediately after switching on, or after an indefinite time during operation. The monitoring devices in the drive components exclude the possibility of a malfunction in the connected drives to a great extent. With regard to the personnel protection, particularly the danger of bodily injury, and/or property damage, however, all trust must not be placed in this fact alone. Until such time as the built-in monitoring devices become active, however, faulty drive movements must be expected, the magnitude of which depends on the type of the controller and the operating state.

⚠ CAUTION	
	Movements that cause danger! Danger of injury or damage to property.

Protection of persons must be ensured by means of monitoring devices or measures that are set up at the plant site. These are provided according to the specific conditions of the system and a danger and fault analysis by the system manufacturer. The safety regulations applicable for the system are also included thereby. Switching off, bypassing or missing activation of safety devices can result in random unwanted movements of the machine or other malfunctions.

3.3.5 Protection against touching hot parts

⚠ CAUTION	
	The surfaces of the machine housing may be hot! Danger of injury! Danger of burns! ▪ Do not touch the housing surface in the vicinity of hot heat sources! Danger of burns! ▪ Before access, allow the devices to cool for 10 minutes after switching off. ▪ If hot parts of the equipment, like machine housings, in which radiators and resistors are located are touched, burns may result!

3.3.6 Protection during handling and installation

The handling and installation of certain parts and components in an unsuitable manner can result in injury under certain circumstances.

WARNING	
	Danger of injury from improper handling! Bodily injury from crushing, shearing, cutting, impacts!

General safety instructions apply in this context:

CAUTION	
	Follow the general installation and safety specifications on handling and installation. ▪ Use suitable installation and transportation equipment. ▪ Prevent squeezing and crushing by taking suitable precautionary measures. ▪ Only use suitable tools. If prescribed, use special tools. ▪ Use hoists and tools in a technically sound manner. ▪ If required, use suitable protective equipment (for example: safety goggles, safety shoes, protective gloves). ▪ Do not stay under suspended loads. ▪ Immediately wipe off any liquids which have escaped since there is a danger of slipping.

4 Product description

4.1 Basic information

The devices of the SE-24 series are ultra compact four quadrant controllers in the protection class IP65 which can be installed outside the switch cabinet.

They are suitable for brushless motors and motors with brushes and were especially designed for the drive of Afag handling components.

The control variant can be seen from the designation of the devices.

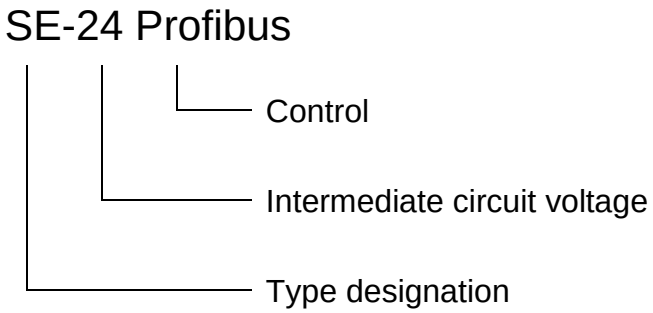

Figure 1: Type code

The servo controllers of the SE-24 series are available with the following control variants:

Type	Order No.	Control
SE-24 I/O	50315434	Digital inputs and outputs
SE-24 Profibus	50315435	PROFIBUS fieldbus
SE-24 EtherCAT	50315436	EtherCAT fieldbus
SE-24 CANopen	50315437	CANopen fieldbus

4.2 Field of application and proper use

The SE-24 servo controller is designed for the decentralised control and regulation of three phase permanent magnet synchronous machines.

The SE-24 servo controller is supplied with a 24 VDC (logic), and 24 VDC (intermediate circuit) protective low voltage via a mains adapter. At the motor connection, the synchronous machine is supplied with a pulse width modulated symmetrical 3 phase rotating field with variable frequency, current and voltage.

The SE-24 is designed as a positioning controller for Afag handling components such as:

- SG-50 servo gripper
- RE-50 18-100V rotary module

Before the SE-24 is deployed in special fields of application with increased normative and device safety standards, e.g. medical technology or avionics, the user must check in each individual case whether the SE-24 meets the respective technical requirements. In case of doubt please contact your sales partner.

The SE-24 is only to be deployed under the stated operating conditions and in accordance with its technical data. Furthermore, the assembly, commissioning, disassembly and maintenance instructions are to be complied with.

4.3 SE-24 performance features

The SE-24 has the following performance features:

- Compact construction, the completely closed housing with integrated fastening adapters can be mounted decentrally near the motor.
- Full integration of all components for the controller and power section including a USB interface (SE-24 Stick) for the PC communication.
- Integrated rotary encoder analysis for the incremental encoder with or without commutation signals.
- Integrated output for 24V parking brakes.
- Compliance with the current CE and EN standards without the need for additional external filter measures.
- EMC optimised metal housing for decentral fastening near the motor. The device has a degree of protection IP65.
- Integration of all necessary filters within the device for operational (industrial) compliance with the EMC regulations, e.g. filters for the 24 V power supply as well as inputs and outputs.
- Positioning for current with position analysis.
- Jerk-free (S^2) or time optimal (trapezoid) positioning, absolute or relative to a reference point.
- User friendly parameterisation with the “afag Tools” PC program.
- Simple connection to a higher level controller, e.g. to a PLC via the I/O level or a fieldbus (Profibus, EtherCAT, CANopen).

5 Technical data

5.1 Ambient conditions and qualification

Parameters	Values	
Permissible temperature range	Storage temperature:	-25 ℃ to +70 ℃
	Operating temperature:	0 ℃ to +40 ℃
Air humidity	Rel. air humidity up to 90 %, no condensation	
Protection category	IP65	
CE conformity: Low Voltage Directive: EMC according to:	2004/108/EC (EMC Directive) not applicable EN61000-6-2 Immunity for industrial environments EN61000-6-4 Emission for industrial environments	

5.2 Dimensions and weight

Parameters	Values
Dimensions (H*W*D)	47 x 87 x 165 mm (without mating plug connector)
Weight	approx. 490 g

5.3 Power data

Parameters	Values
U_e electronics supply voltage	9…30V DC
U_p power supply voltage	9…35V DC
Residual ripple of the supply voltage	5%
Current consumption (all outputs without load)	typ. 40 mA @ 24 V
Max. output current	7.5 A
Max. current more than 60s (U_p=24V, T_{amb}=40°C)	7.5 A
Max. current more than 600s (U_p=24V, T_{amb}=40°C)	6 A
Rated output current (U_p=24V, T_{amb}=40°C)	5 A

5.4 Protective devices

Parameters	Values
Overvoltage power-off	yes
Undervoltage power-off	yes
Excess temperature cut-out	yes

5.5 Motor temperature monitoring

Parameters	Values
Analog sensor	PTC 111-K13-140° Reissmann

5.6 Emitter evaluation and analog input [X6]

Parameters	Value
Inputs for Hall sensors	
Type	Single ended
Inputs	H1, H2, H3
Input voltage	5 V
max. pulse frequency (per track)	100 kHz
Inputs for encoder	
Type	Single ended
Inputs	A, B, Inx
Input voltage	5 V
max. pulse frequency (per track)	300 kHz (push-pull) 100 kHz (open collector)
Supply voltage for Hall sensors and encoder	
Output voltage	5 V +/-5 %
max. load	200 mA
Analog input	
Type	Single ended
Measuring range	0…10 V
Resolution	10 bit
Input impedance	ca. 20 kOhm

5.7 Parameterization interface (CAN) [X4]

Parameters	Value
Baud rate	up to 1 Mbit/s
Protocol	DS301 V3.0
Device profile	DSP402 V2.0

5.8 Digital inputs and outputs [X2]

Parameters	Value
Digital inputs	
Input voltage, low ($U_{IN\ low}$)	-30 V…5 V
Input voltage, high ($U_{IN\ high}$)	9 V…30 V
Input voltage, high max. (@ U_{IN}=30V)	typ. 5.3 mA
Digital outputs	
Type	plus switching
max. output current	0.7 A
Short-circuit proof	yes

6 Mechanical installation

6.1 Important information

- For installation of the SE-24 the cut-outs at the end plates should be used as fastening points.
  Screw size: M5
- Keep a clearance of 100 mm above the device in order to ensure adequate ventilation of the SE-24.

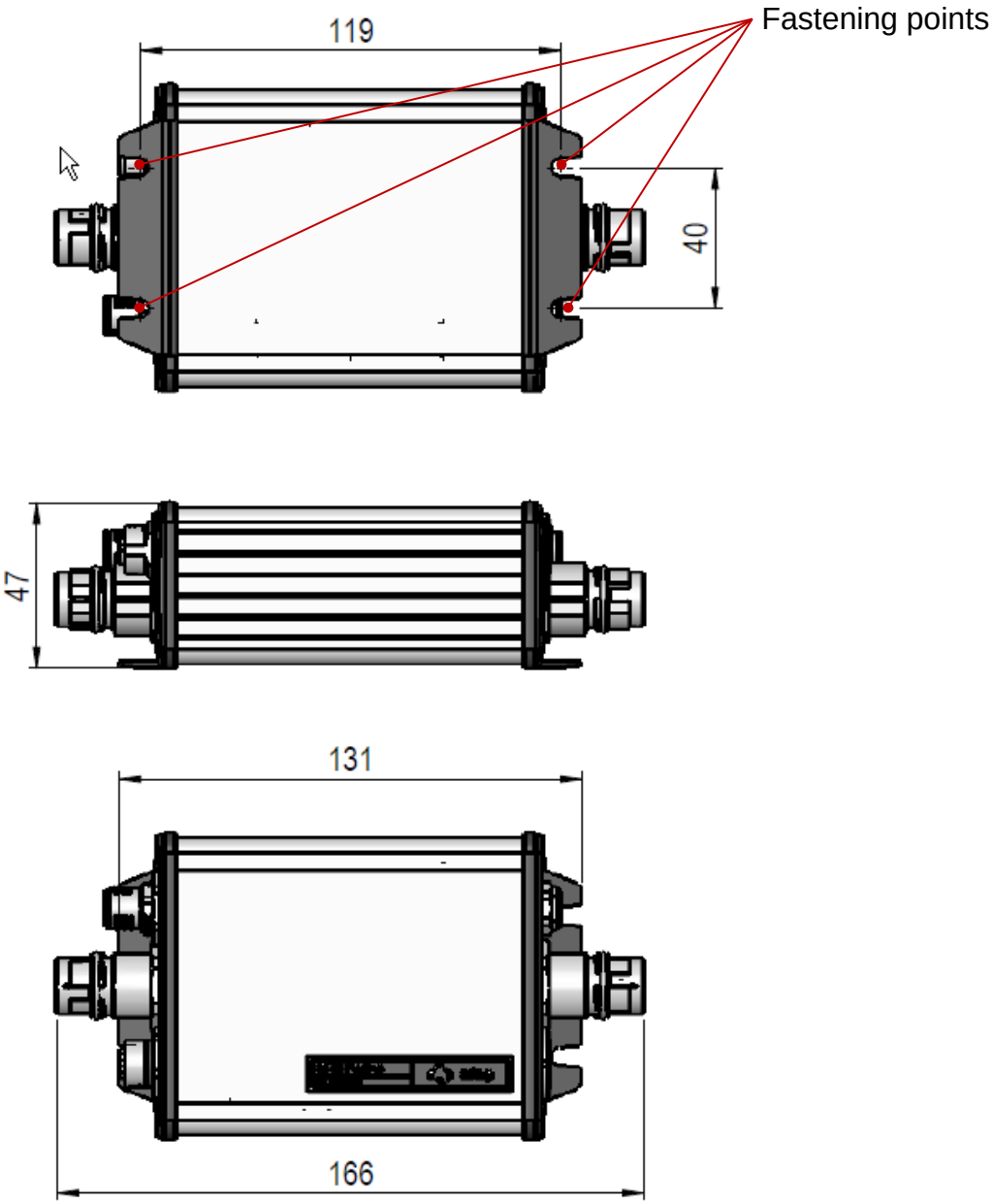

Figure 2: Dimensions and fastening points

7 Electrical connection

7.1 Connections on the input side (IN)

Figure 3: View of the connections on the input side (IN), I/O type (left) and fieldbus (right)

Plug	Designation
X1	Performance and logic supply
X2	I/O interface
X2a, X2b, X2d	Fieldbus In (M12)
X3a, X3b, X3d	Fieldbus Out (M12)
X4	Programming interface

7.1.1 Power supply connection [X1]

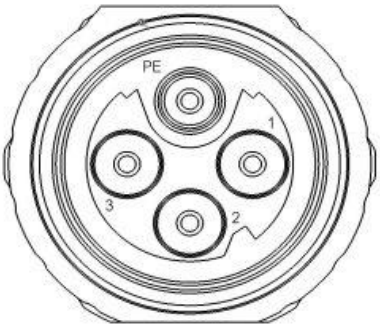

Figure 4: View of the connection [X1]

7.1.1.1 Type on device [X1]

- Intercontec, 4 pole M17; flush-type power plug; BEGA894MR0900153A000

7.1.1.2 Mating plug [X1]

- Power cable SE-24/SE-48, 5 m, Afag no. 50118124

7.1.1.3 Pin assignment [X1]

Pin No.	Designation	Specification
1	0 Volt	Common ground potential for the 24 V power supply and the 24 V control supply Conductor cross-section at least 1.5mm^2
2	U_e 24 Volt	Voltage supply of the control electronics Conductor cross-section at least 1.0mm^2
3	U_p 24 Volt	Voltage supply of the power electronics Conductor cross-section at least 1.5mm^2
PE	PE	Connection to housing

⚠ CAUTION	
	Do not mix up the voltage supply lines. The complete motor connection is designed for poled DC voltage. Mixing up the plus and the minus pole will lead to severe damage to the electronics.

7.1.2 Input and output connections [X2]

Figure 5: View of the connection [X2]

7.1.2.1 Type on device [X2]

- Phoenix Contact: 12 pole sensor-/actuator flush-type plug, SACC-DSI-M12MS-12CON-M16/0,5 Phoenix Contact No.1419700

7.1.2.2 Mating plug [X2]

- I/O cable SE-24, 5m, Afag No. 50312913

7.1.2.3 Pin assignment of the I/O cable

Pin No.	Designation	Colour assignment	
1	drive_enable/fault_reset	brown	
2	start/stop_ref	blue	
3	start/stop_move	white	
4	reserve	green	
5	pos_nr_bit0	pink	
6	pos_nr_bit1	yellow	
7	pos_nr_bit2	black	
8	pos_nr_bit3	grey	
9	ready	red	
10	drive_enable_ok	violet	
11	ref_valid	grey-pink	
12	move_ok	red-blue	

For the functional description of the inputs and outputs please see the document:

SE-24 IO Manual

7.1.3 Profibus connection

The Profibus connection on the SE-24 servo controller is carried out as a 5 pole M12 plug or socket (b-coded) according to EN 50170.

7.1.3.1 Profibus IN [X2b]

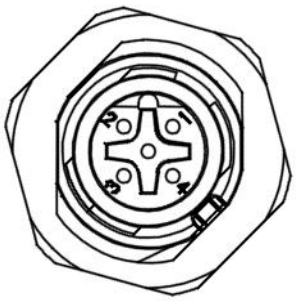

Figure 6: View of the connection [X2b]

X2b, Profibus IN		
Flush-type plug, 5 pole M12, b-coded Phoenix: 1419661 SACC-DSI-M12MSB-5CON-M16/0,5		
Pin	**Designation**	**Specification**
1	n.c.	
2	A line (R/TxD-N)	Data line -
3	n.c.	
4	B line (R/TxD-P)	Data line +
5	n.c.	

7.1.3.2 Profibus OUT [X3b]

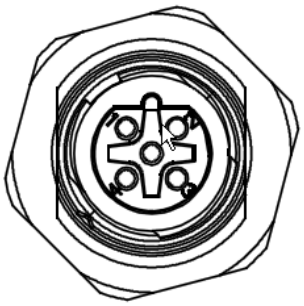

Figure 7: View of the connection [X3b]

X3b, Profibus OUT		
Flush-type socket, 5 pole M12, b-coded Phoenix: 1419674 SACC-DSI-M12FSB-5CON-M16/0,5		
Pin	**Designation**	**Specification**
1	+5V (VCC_ISO)	+5 V supply
2	A line (R/TxD-N)	Data line -
3	ISOGND	Data ground
4	B line (R/TxD-P)	Data line +
5	n.c.	

For the functional description of the input and output data please see the document:

SE-24 Profibus Manual

NOTE	
	PROFIBUS cabling Owing to the very high possible baud rates, we recommend the use of the standardized cables and connectors exclusively. These are, to an extent, equipped with additional diagnosis options and in case of a fault, simplify the fast analysis of the fieldbus hardware. When constructing the PROFIBUS network, follow the advice of the current literature or the following information and instructions without fail, to get a stable and fault-free system. In case of cabling not having been done properly, faults can occur on the PROFIBUS during operation, which can result in the servo controller getting switched off with an error message, for reasons of safety.

7.1.4 Bus cable for PROFIBUS

The following cables of the company Phoenix Contact should be used for the Profibus connection:

Bus system cable, PROFIBUS, 2 pole, PUR halogen-free, violet RAL 4001, shielded, straight M12-SPEEDCON plug, b-coded, on straight M12-SPEEDCON socket, b-coded

Phoenix Contact Profibus cable

PROFIBUS cable	Order No.	Length in m
	1518106	0,3
	1518119	0,5
	1518122	1
	1518135	2
	1518148	5
	1518151	10
	1518164	15

7.1.5 Termination and bus terminating resistors

Every bus segment of a PROFIBUS network must be fitted with bus terminating resistors, to minimize cable reflections, to ensure a nearly constant load behavior at the bus and to set a defined equilibrium rest potential on the cable. The termination is done at the beginning and at the end of a bus segment.

Due to the high protection class the PROFIBUS module of the SE-24 servo controller has no integrated terminating resistors.

Therefore, an M12 connector terminating resistor should be used.

The following bus terminating resistor of the company Phoenix Contact should be used for the Profibus termination:

Phoenix Contact Profibus terminating resistor

Profibus terminating resistor

Type	Article No.
SAC-5P-M12MS PB TR	1507803

NOTE	
	The erroneous or wrong bus termination is a frequent cause of troubles.

7.1.6 EtherCAT connection

The EtherCAT is connected to the SE-24 servo controller via two d-coded 5 pole M12 sockets.

7.1.6.1 EtherCAT IN [X2d]

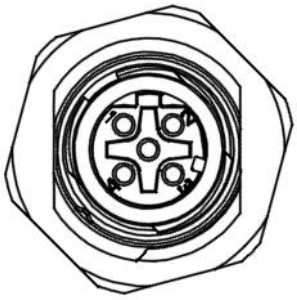

Figure 8: View of the connection [X2d]

X2d, EtherCAT IN		
Flush-type socket, 5 pole M12, d-coded Phoenix: 1419616 SACC-DSI-M12FSD-4CON-M16/0,5		
Pin	**Designation**	**Specification**
1	Tx+	Transmission data +
2	Rx+	Received data +
3	Tx-	Transmission data -
4	Rx-	Received data -
5	n.c.	

7.1.6.2 EtherCAT OUT [X3d]

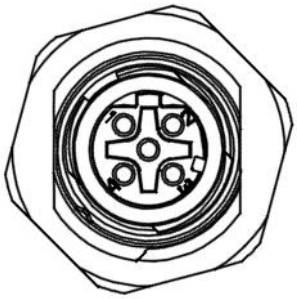

Figure 9: View of the connection [X3d]

X3d, EtherCAT OUT		
Flush-type socket, 5 pole M12, d-coded Phoenix: 1419616 SACC-DSI-M12FSD-4CON-M16/0,5		
Pin	**Designation**	**Specification**
1	Tx+	Transmission data +
2	Rx+	Received data +
3	Tx-	Transmission data -
4	Rx-	Received data -
5	n.c.	

For the functional description of the input and output data please see the document:

SE-24 EtherCAT Manual

NOTE	
	EtherCAT cabling When constructing the EtherCAT network, follow the advice of the current literature or the following information and instructions without fail, to get a stable and fault-free system. In case of cabling not having been done properly, faults can occur on the EtherCAT during operation, which can result in the servo controller getting switched off with an error message, for reasons of safety.

7.1.7 Bus cable for EtherCAT

Only use Ethernet cables to connect EtherCAT devices which comply at least with category 5 (CAt5) according to EN 50173 or ISO/IEC 11801. EtherCAT uses 4 leads of the cable for signal transmission.

The following cables of the company Beckhoff should be used for the EtherCAT connection:

EtherCAT cable M12 plug, straight, d-coded, 4 pole M12 plug, straight, d-coded, 4 pole

Beckhoff EtherCAT cable

EtherCAT cable	Order No.	Length in m
	ZK1090-6161-0005	0,5
	ZK1090-6161-0020	2
	ZK1090-6161-0025	2.5
	ZK1090-6161-0050	5
	ZK1090-6161-0100	10

7.1.8 CANopen connection

The CANopen connection on the SE-24 servo controller is carried out as a 5 pole M12 plug or socket (a-coded).

7.1.8.1 CANopen IN [X2a]

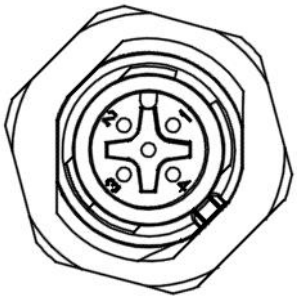

Figure 10: View of the connection [X2a]

X2a, CANopen IN		
Flush-type plug, 5 pole M12, a-coded Phoenix: 1419645 SACC-DSI-M12MS-5CON-M16/0,5		
Pin	**Designation**	**Specification**
1	Shield	
2	n.c.	
3	CAN_GND	Data ground
4	CAN_H	CAN high
5	CAN_L	CAN low

7.1.8.2 CANopen OUT [X3a]

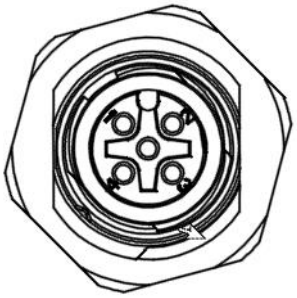

Figure 11: View of the connection [X3a]

X3a, CANopen OUT		
Flush-type socket, 5 pole M12, a-coded Phoenix: 1419658 SACC-DSI-M12FS-5CON-M16/0,5		
Pin	**Designation**	**Specification**
1	Shield	
2	n.c.	
3	CAN_GND	Data ground
4	CAN_H	CAN high
5	CAN_L	CAN low

For the functional description of the input and output data please see the document:

SE-24 CANopen Manual

NOTE	
	CAN cabling When constructing the CAN network, follow the advice of the current literature or the following information and instructions without fail, to get a stable and fault-free system. In case of cabling not having been done properly, faults can occur on the CAN during operation, which can result in the servo controller getting switched off with an error message, for reasons of safety.

7.1.9 Bus cable for CANopen

The following cables of the company Phoenix Contact should be used for the CANopen connection:

Bus system cable, CANopen/DeviceNet, 5 pole, PUR halogen-free, violet RAL 4001, shielded, straight M12-SPEEDCON plug, a-coded, on straight M12-SPEEDCON socket, a-coded

Phoenix Contact CANopen cables

CANopen-Kabel	Order No.	Length in m
	1518258	0,3
	1518261	0,5
	1518274	1
	1518287	2
	1518290	5
	1518300	10
	1518313	15

7.1.10 Termination and bus terminating resistors

Every bus segment of a CAN network must be fitted with bus terminating resistors, to minimize cable reflections, to ensure a nearly constant load behavior at the bus and to set a defined equilibrium rest potential on the cable. The termination is done at the beginning and at the end of a bus segment.

Due to the high protection class the CAN module of the SE-24 servo controller has no integrated terminating resistors.

Therefore, an M12 connector terminating resistor should be used.

The following bus terminating resistor of the company Phoenix Contact should be used for the CAN-bus termination:

Phoenix Contact CANopen terminating resistor

CANopen terminating resistor

Type	Article No.
SAC-5P-M12MS CAN TR	1507816

NOTE	
!	The erroneous or wrong bus termination is a frequent cause of troubles.

7.1.11 Parameterization connection [X4]

The parameterization connection on the SE-24 servo controller is carried out as a 4 pole M8 socket.

7.1.11.1 Parameterization connection [X4]

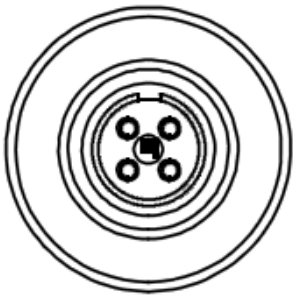

Figure 12: View of the connection [X4]

X4, parameterization connection		
Female socket, 4 pole M8 Binder: 09-0412-00-04 Subminiature connector, series 712		
Pin	**Designation**	**Specification**
1	CAN_H	CAN high
2	CAN_L	CAN low
3	24V DC	Supply of brake release switch
4	brake_release	Input of brake release switch

7.1.11.2 Mating plug [X4]

The following components are required for parameterization:

- Programming cable SE-24, 5m, Afag No. 50315431
- SE-24 Stick, Afag No. 50315432
- SE-24 parameterization software, “afag Tools” (free download at: www.afag.com)

For a description of the “afag Tools” parameterization software please refer to the document

SE-24 Software Manual

7.2 Connections on the output side (OUT)

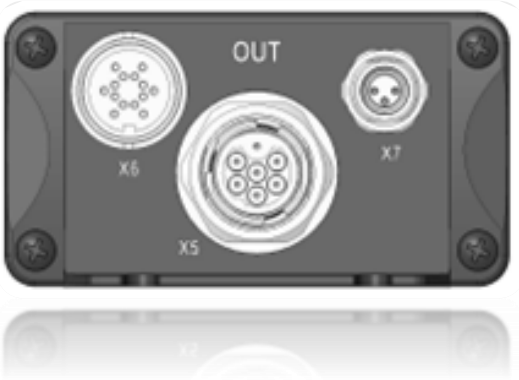

Figure 13: View of the connections on the output side (OUT), all types

Plug	Designation
X5	Motor connection
X6	Transmitter connection
X7	Reference sensor connection

7.2.1 Motor connection [X5]

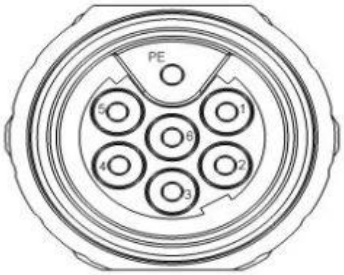

Figure 14: View of the connection [X5]

7.2.1.1 Type on device [X5]

- Intercontec, 7 pole, M17 flush-type power socket;
  BEGA 861 FR 01 00 152A 000

7.2.1.2 Mating plug [X5]

- Afag cable depending on the module to be connected
- or Intercontec plug, 7 pole, M17 power cable plug;
  BSTA 878 MR 08 86 001A 000

7.2.1.3 Pin assignment [X5]

Pin No.	Designation	Specification
1	U	Motor phase 1
2	V	Motor phase 2
3	W	Motor phase 3
4		
5	Br +	Brake +
6	Br -	Brake -
PE	PE	Ground

7.2.2 Encoder connection [X6]

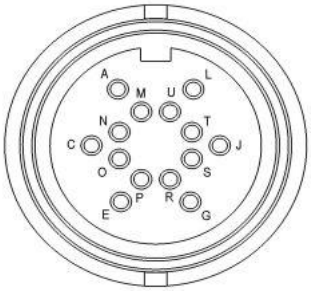

Figure 15: View of the connection [X6]

7.2.2.1 Type on device [X6]

- Binder, miniature circular connector 14 pole, series 423, 09-0454-80-14

7.2.2.2 Mating plug [X6]

- Afag cable depending on the module to be connected
- or Binder miniature circular connector, 14 pole, series 423

7.2.2.3 Encoder pin assignment [X6]

Pin No.	Designation	Specification
A	Encoder GND	Incremental encoder reference potential
C	MTemp -	Motor temperature sensor reference potential
E	VDD 5V	Incremental encoder power supply (100mA)
G	n.c.	
J	A	Incremental signal
L	Hall_U	Hall sensor phase U
M	n.c.	
N	Hall_V	Hall sensor phase V
O	B	Incremental signal
P	Hall_W / Z	Hall sensor phase W / index
R	n.c.	
S	MTemp +	Motor temperature sensor, PTC, NC contact
T	n.c.	
U	n.c.	

7.2.3 Reference sensor connection [X7]

The reference sensor connection on the SE-24 servo controller is carried out as a 3 pole M8 socket.

7.2.3.1 Reference sensor connection [X7]

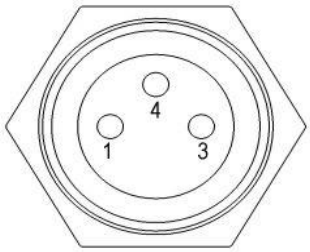

Figure 16: View of the connection [X7]

X7, reference sensor connection		
Flush-type socket, 3 pole M8 Phoenix: 1453449 SACC-DSI-M8FS-3CON-M12/0,5		
Pin	**Designation**	**Specification**
1	24 VDC	Sensor supply
3	0 VDC	Sensor ground
4	Ref_In	Sensor input

7.2.3.2 Mating plug [X7]

- Afag cable depending on the module to be connected
- or Phoenix Contact sensor plug SACC-M 8MS-3CON-M-SW Art.Nr.1501252
- or standard sensor plug, 3 pole M8 of another manufacturer

8 Electrical installation of the SE-24 in the system

8.1 Connection to the power supply and the controller

The servo controller is connected to the 24V power supply and the 24V control supply. A common reference potential is used (GND).

Connection to a higher level control system (PLC) is carried out - dependent on the SE-24 model – via digital inputs and outputs or a fieldbus system (Profibus DP, EtherCAT, CANopen).

The SE-24 servo controller must be completely connected before the voltage supply for the power and control electronics are turned on.

⚠ CAUTION	
	Do not mix up the voltage supply lines. The complete motor connection is designed for poled DC voltage. Mixing up the plus and the minus pole will lead to severe damage to the electronics.

8.2 Emergency off / Emergency stop

The diagrams on the following pages display an example of a system composed of one or more SE-24s, the mains adapter with the mains connection, a controller and the switching elements for the realisation of the EMERGENCY STOP function in accordance with EN 60204-1, stop category 1.

The system is composed of the following components:

S1 Mains switch

F1 Fuse for the 24 V logic power supply

K1 Mains contactor

F2 Fuse in the +24 V power supply, this fuse is required for every SE-24 separately

ECS EMERGENCY STOP switching device, a safety chain is attached

PLC PLC or industry PC, deployed for controlling the system.

In normal operation the switching contacts in the ECS (Emergency cutout switching device) are closed. The PLC activates the mains contactor K1 via a digital output.

Each SE-24 registers its operational readiness with the PLC via a “ready” signal. The PLC controls the controller release of the connected SE-24 via the “drive_enable/fault_res” signal. In case of an error (Emergency Off, Emergency Stop) the power supply and the controller release are switched off. With the SE-24 I/O the “drive_enable/fault_res” signal should also be carried out via the ECS.

The choice of a suitable ECS is dependent on the concrete application. In the simplest case, an ECS is not required. Instead multipolar switching contacts are employed in the safety chain.

Figure 17: Example of a circuit diagram of the SE-24 I/O

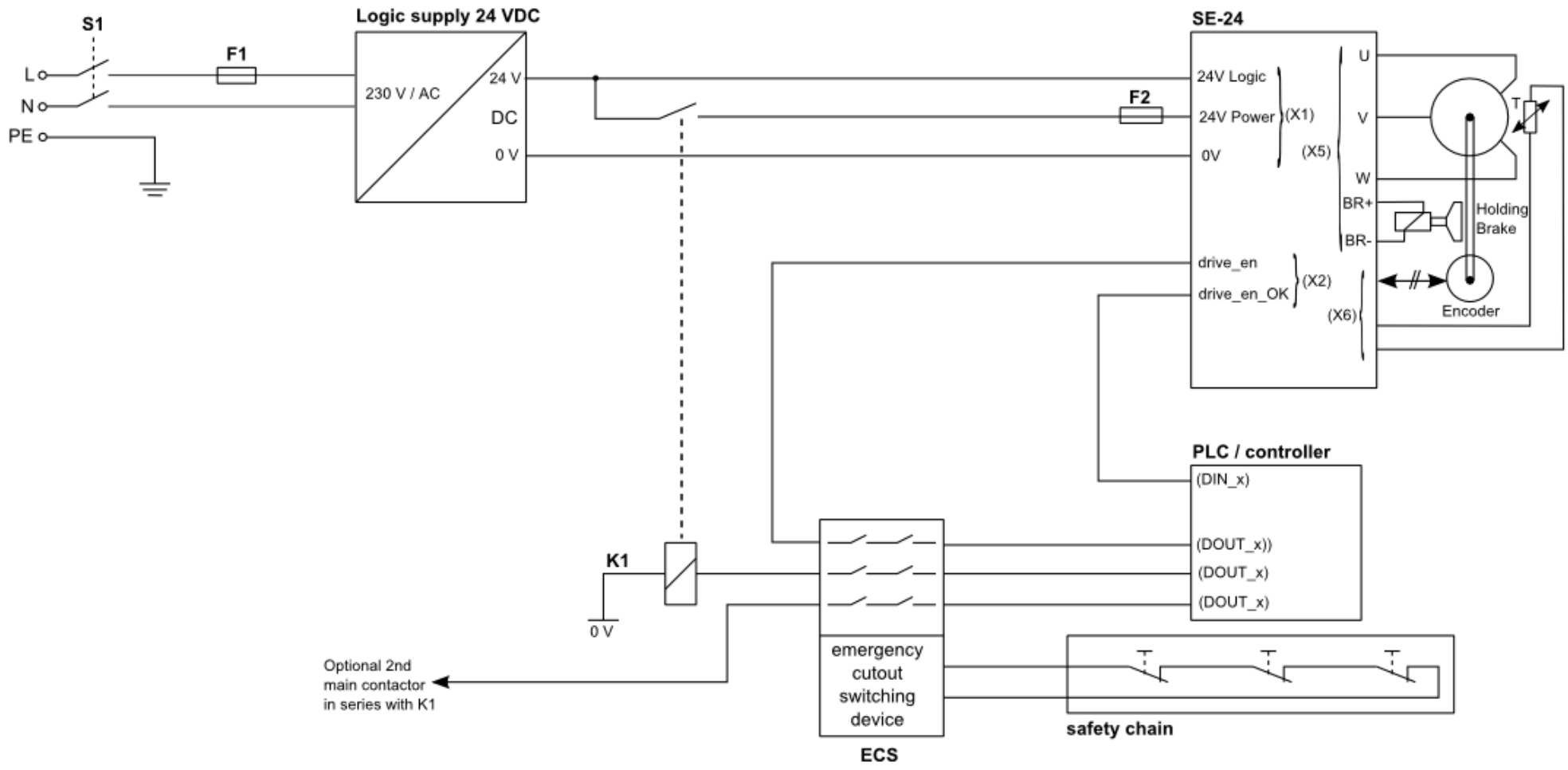

Figure 18: Example of a circuit diagram of the SE-24 fieldbus

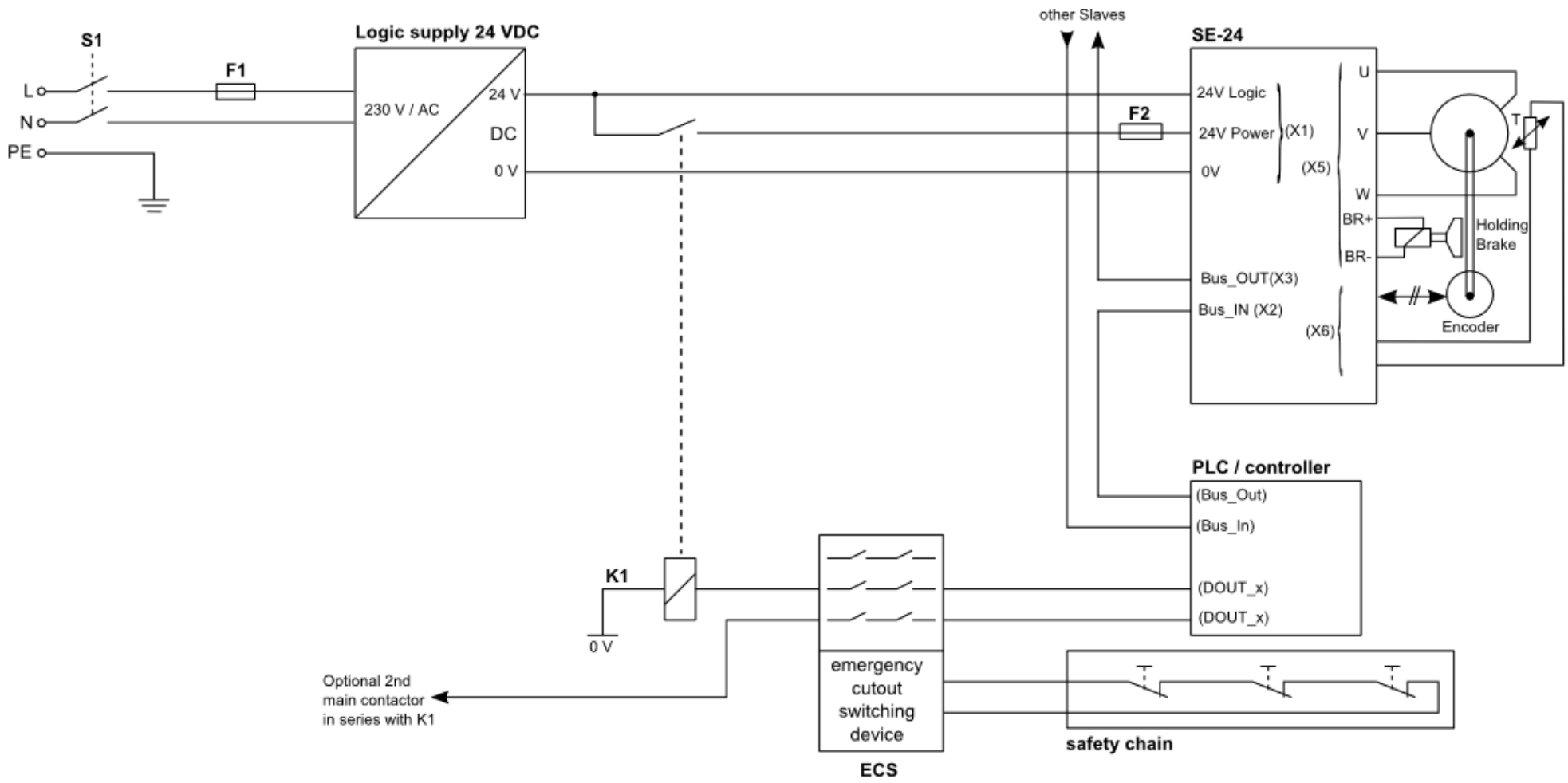

9 Functional description

9.1 Basic functions

With the SE-24 servo controller two different operating modes are available which can also be switched over during operation.

Position mode: Move to position – check moment (current)

Current mode: Move to moment (current) – check position

9.1.1 Position mode

The module moves to a position Y which was defined in the position set or specified via the fieldbus. The corresponding position and current values can be read out continuously (only for bus variants). After the delay period for the position within the position window has expired, the “move_ok” signal is set.

9.1.2 Current mode

The module moves to a position Y which was defined in the position set or specified via the fieldbus. The corresponding position and current values can be read out continuously (only for bus variants). When the module reaches a part at position Z, the current rises and the “move_ok” signal is set after the delay period for the current in the current value window has expired.

In addition the starting current can be hidden for a defined time via the Current gating Time parameter so that the “move_ok” signal is not set right at the start.

If no part is present the module will reach position Y without however reaching the current value window. In this case the “move_ok” signal is not set. The higher level control system can manage this case via a long-time monitoring.

Position mode

X = position_value (actual position)

Y = target_position (target position)

Current = maximum current (from parameterization)

Figure 19: Position mode

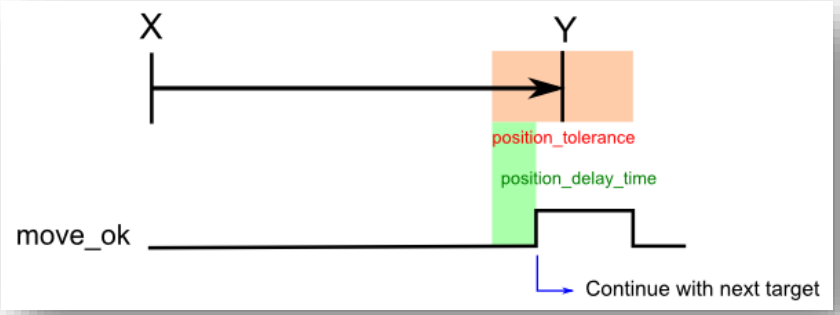

Current mode

X = position_value (actual position)

Y = target_position (abortion position)

Current = target_current

Figure 20: Current mode

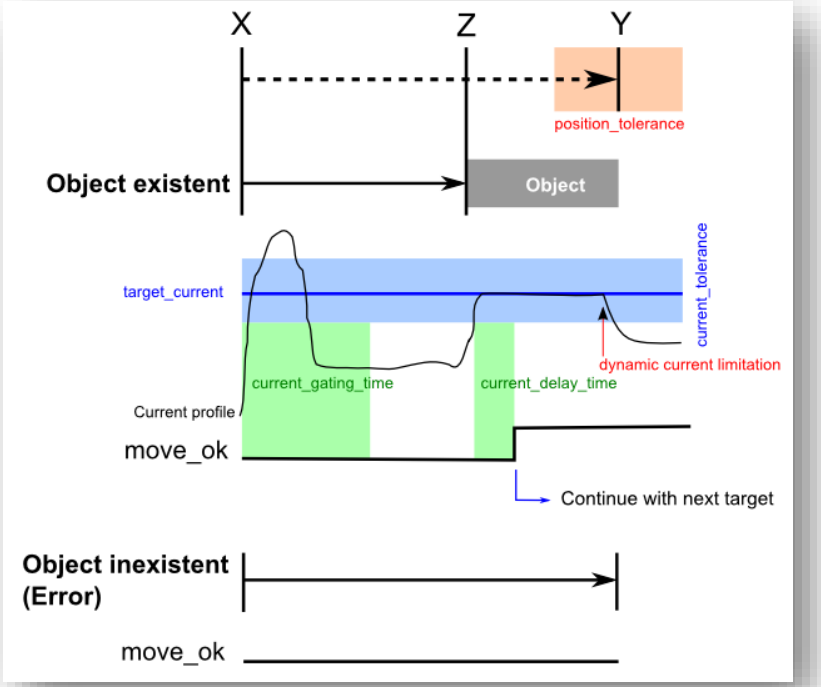

9.2 Dynamic current limitation

This function is for protecting the motor against overheating and is primarily necessary for motors without temperature sensor. For motors with temperature sensors (PTC, KTY, etc.) it's optional.

The dynamic I*t – current limitation limits the desired current value range of the controller depending the actual motor current and the time. This function is monitoring the value of the peak current for both the positive and the negative rotating direction. How long the peak current Ip (CURR_DynLimitPeak) can flow, is conditioned by the parameter tp (CURR_DynLimitTime). After this time the motor current decreases to the continuous current Ic (CURR_DynLimitCont). This is only valid, if the current was limited to the peak current Ip (CURR_DynLimitPeak) all the time. If the current was less than the peak current, the time tp (CURR_DynLimitTime) increases accordantly.

A higher motor current then the continuous current is not allowed till the actual motor current was under the continuous current Ic (CURR_DynLimitCont). The longer the motor current was under the continuous current Ic (CURR_DynLimitCont) and the lower it was, that higher would be the allowed temporary motor current, meanwhile the peak current Ip (CURR_DynLimitPeak) keeps limited.

Figure 21: Dynamic current limitation

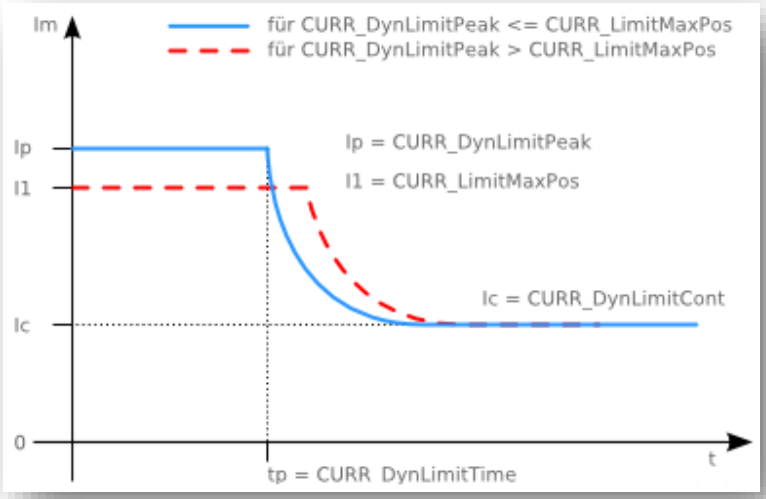

9.3 SE-24 I/O signal diagram

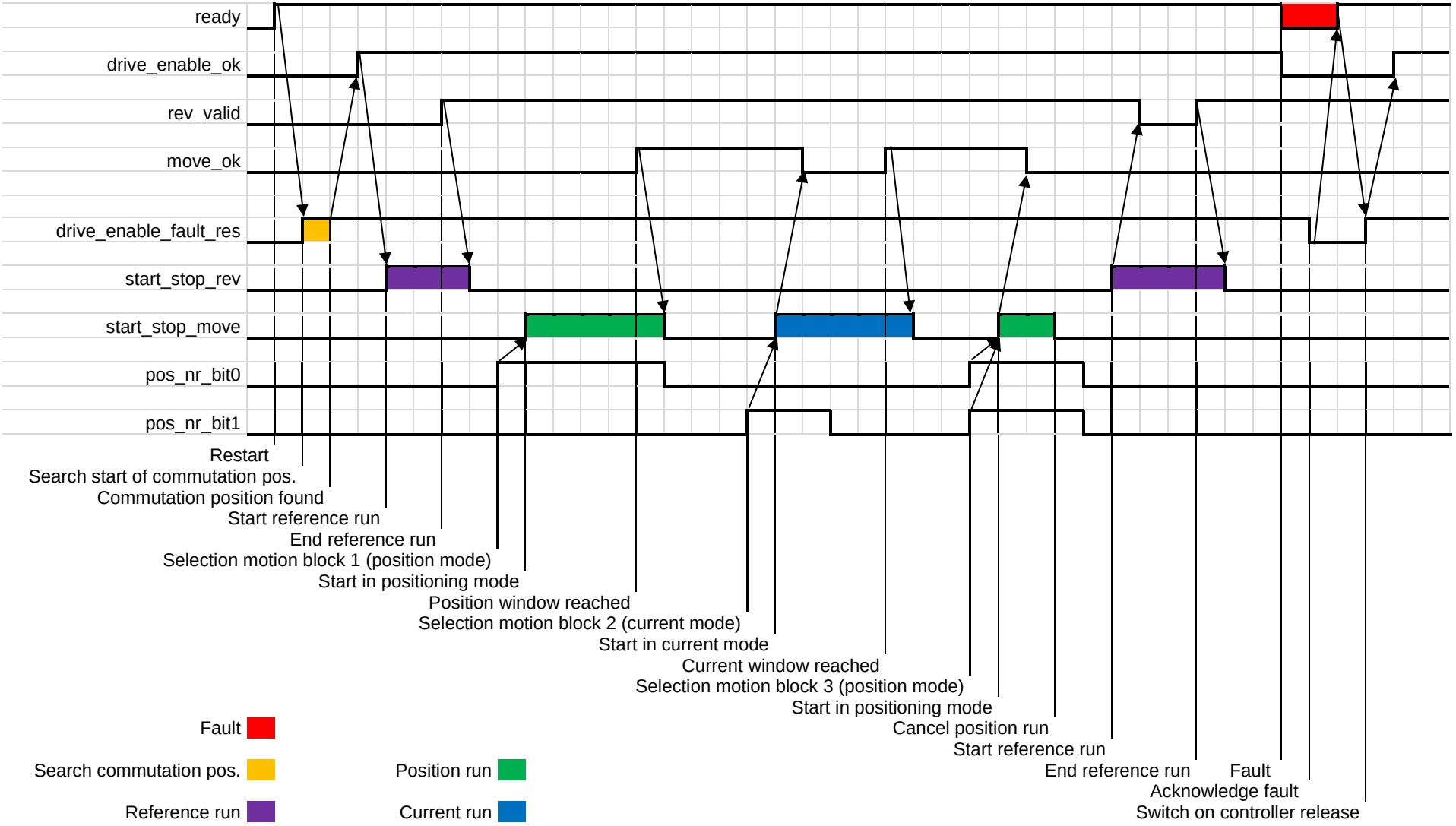

9.4 SE-24 fieldbus signal diagram

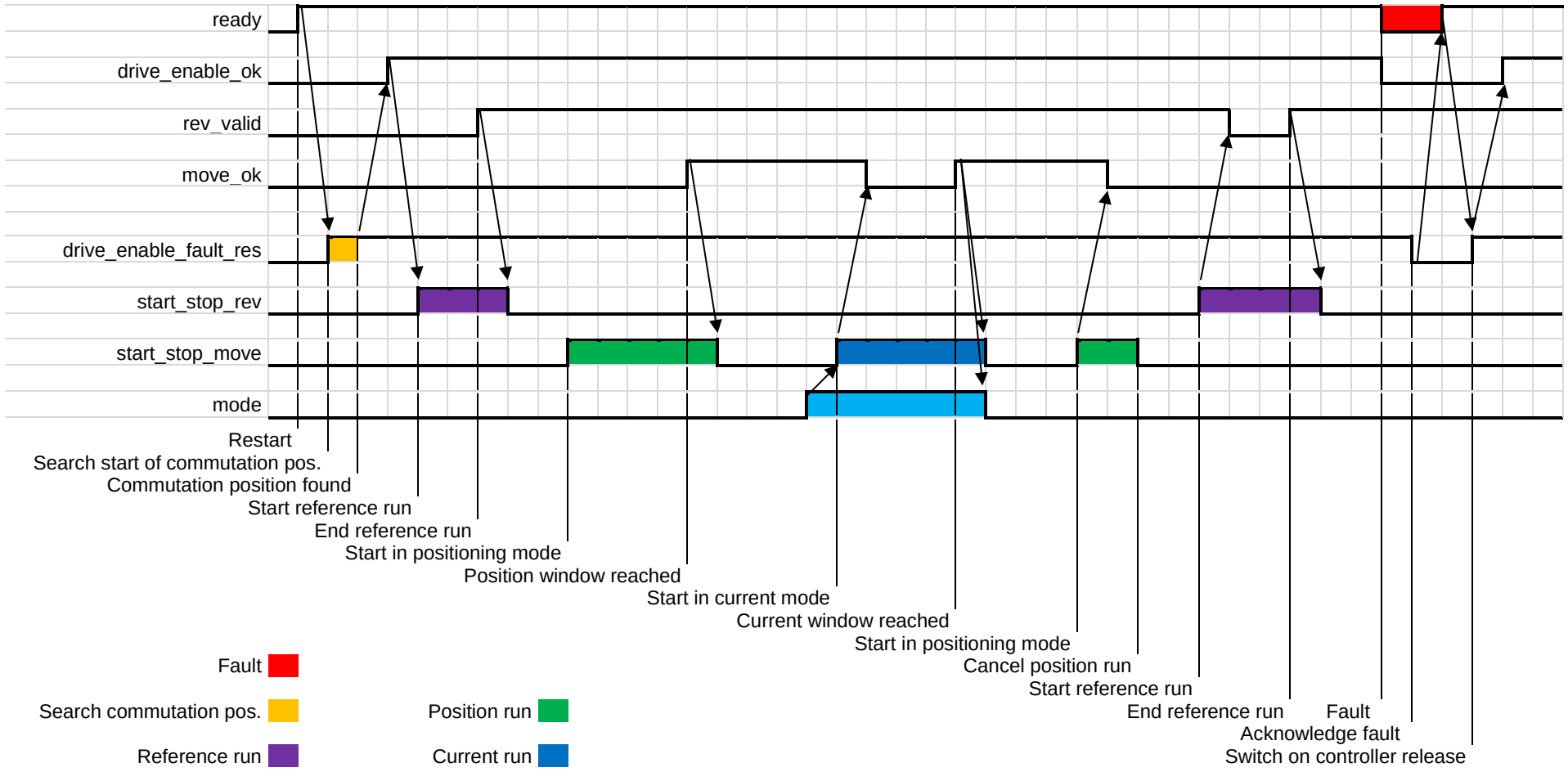

10 Error messages/fault diagnosis chart

10.1 Overview of faults

The errors which occurred are shown as numbers. These can be read directly on the servo controller with the “afagTools” parameterization program.

With the Bus models of the SE-24 the error numbers can also be read in the “error_no” object.

Object name	error_no
Data type	INT16
Access	read only
Value range	[-32768 .. 32767]
Value =0	There is no error
Value >0	Error number (see table: Error Register)

The following table provides an overview of faults which can occur.

Table 1: Error Register

Error no. [decimal]	Error no. [hex]	Error name	Description	CANopen error code
Parameter errors				
-300	0xFED4	ERR_Par_GenericError	General error	-
-301	0xFED3	ERR_Par_StoreFailed	Saving error	-
-302	0xFED2	ERR_Par_RestoreFailed	Loading error	-
-306	0xFECE	ERR_Par_HasNotWritePermission	Parameter cannot be written	-
-307	0xFECD	ERR_Par_HasNotReadPermission	Parameter cannot be read	-
-308	0xFECC	ERR_Par_ValueOutOfRange	Parameter value outside the range	-
-315	0xFEC5	ERR_Par_PermanentData_SSI_BadCRC	Data for SSI encoder are defect (wrong CRC32 checksum)	-
-316	0xFEC4	ERR_Par_BadVersion	Version of the saved parameters does not match the firmware	0x6320
-318	0xFEC2	ERR_Par_BadCRC	Saved parameters are defect (wrong CRC32 checksum)	0x6320
-322	0xFEBE	ERR_Par_CannotSet_AxIsMoving	Parameter cannot be written because a movement is carried out	-
-325	0xFEBB	ERR_Par_CannotSet_PosModeIsNotEnabled	Parameter cannot be written because positioning mode is not active	-

Error no. [decimal]	Error no. [hex]	Error name	Description	CANopen error code
-344	0xFEA8	ERR_Par_CannotSet_AxIsInHomingMode	Parameter cannot be written because reference mode (homing) is active	-
-345	0xFEA7	ERR_Par_CannotSet_HomingRequired	Parameter cannot be written because reference mode (homing) was not carried out	-
Errors of communication devices				
-501	0xFE0B	ERR_Com_CommunicationError	Communication error	0x8100
-511	0xFE01	ERR_Com_MasterGuardTimeExceeded	Master-Guarding error	0x8130
-512	0xFE00	ERR_Com_MasterHeartBeatTimeExceeded	Master-Heartbeat error	0x8130
-601	0xFDA7	ERR_Com_CanBusOff	CAN bus is switched off	-
-609	0xFD9F	ERR_Com_CanOtherError	Other CAN error	-
Commutation Errors				
-730	0xFD26	ERR_CommutationNotReferenced	The calibration of the Commutation is not executed. This calibration will be executed at devices, which uses the encoder signals for commutation like the servogripper SG-50 for example. The calibration will only be executed automatically at the first time when the enable will be set after a restart.	-
Device errors				

Error no. [decimal]	Error no. [hex]	Error name	Description	CANopen error code
-1000	0xFC18	ERR_FieldUnderVoltage	Power voltage (Up) is too low	0x3220
-1001	0xFC17	ERR_FieldOverVoltage	Power voltage (Up) is too high	0x3210
-1002	0xFC16	ERR_MainsUnderVoltage	Electronics voltage (Ue) is too low	0x3120
-1003	0xFC15	ERR_MainsOverVoltage	Electronics voltage (Ue) is too high	0x3110
-1020	0xFC04	ERR_DeviceOverTemperature	Overtemperature of the device	0x4210
-1021	0xFC03	ERR_HeatSinkOverTemperature	Overtemperature of end stage	0x4310
-1060	0xFBDC	ERR_MotShortCircuit	Short-circuit (motor-motor, motor-GND, motor-power)	0x2130
-1061	0xFBDB	ERR_MotOverCurrent	Overcurrent	-
-1078	0xFBCA	ERR_Enc_Failed	Encoder error	-
Regv errors				
-3010	0xF43E	ERR_Blockage	The motor was blocked	-
Regp errors				
-4000	0xF060	ERR_Regp_FollowingError	Permissible servo lag was exceeded	0x8611
Homing errors				
-4200	0xF43E	ERR_Home_UnknownMethod	Unknown referencing method	-

Error no. [decimal]	Error no. [hex]	Error name	Description	CANopen error code
-4201	0xF43E	ERR_Home_IndexNotFound	Index impulse was not found during referencing	-
Fatal errors (these errors cannot be reset – device is defective)				
-30000	0x8AD0	ERR_Fatal	Fatal error	0xFF00
-30001	0x8ACF	ERR_BadCodeCRC	Wrong checksum (CRC32) of the program	-
-30002	0x8ACE	ERR_StackOverflow	Program stack overflow	-
-30003	0x8ACD	ERR_StackUnderflow	Program stack underflow	-
-30010	0x8AC6	ERR_SelftestFailed	Self-test failed	0xFF00
-30030	0x8AB2	ERR_ImCalibrationFailed	Current calibration failed	0xFF00
-30031	0x8AB1	ERR_UmCalibrationFailed	Voltage calibration failed	0xFF00

NOTE

If your device displays a fault number that is not described in the fault diagnosis table, please contact your sales partner.

It is possible that this fault number has been assigned additional monitoring functions in the course of firmware updates or in the case of customer specific firmware versions.

11 Instructions for safe and EMC compatible installation

11.1 Explanations and terminology

Electromagnetic compatibility (EMC) or EMI (electromagnetic interference) includes the following requirements:

- an adequate interference resistance of an electrical system or electrical device in respect of external electrical, magnetic or electromagnetic interference transmitted via lines or radiation
- a sufficiently low level of emitted electrical, magnetic or electromagnetic interference by an electrical system or electrical device to other devices in the vicinity, via lines or radiation.

11.2 General information on EMC

The interference emission and interference resistance of a servo controller is always dependent on the overall design of the drive. The drive is composed of the following components:

- Voltage supply
- Servo controller
- Motor
- Electromechanics
- Realisation and type of wiring
- Higher level controller

NOTE	
	The SE-24 servo controller was checked according to the applicable EMC directives EN61000-6-2 Immunity for industrial environments EN61000-6-4 Emission for industrial environments

11.3 EMC categories: first and second environments

The SE-24 servo controller, when correctly installed and connected, complies with the regulations of the corresponding product norms EN 61000-6-2 and EN-61000-6-4. In these norms, reference is no longer made to “limiting value classes”, but to so called environments. The “first” environment covers electricity networks servicing residential buildings, the second environment covers electricity networks exclusively servicing industrial enterprises.

11.4 Connection between SE-24 and motor

The following wiring guidelines should be followed for connecting the servo controller to the motor:

- Only use shielded cables.
- Use separate cables for the motor phases and the angle transmitter.
  Optional: Use a combined cable for the motor and the angle transmitter with separate shielding.
- Connect all (outer) shields with the SE-24 housing.
- Connect the shield of the motor cable with the motor housing.
- Ensure a “good” PE connection between the motor and the SE-24.

NOTE	
	A “good” PE connection has a small impedance even at high interference frequencies.

11.5 Connection between SE-24 and mains adapter

- Use cable with a cross section large enough to reduce “ground bouncing” in the intermediate circuit power supply.
  2.5 mm² (AWG13) should be sufficient for a cable length of up to 5 m between the mains adapter and the SE-24.
- Use a star shaped cabling when a number of SE-24s are connected to the mains adapter. The star point of the reference potential should be as close to the mains adapter as possible.
- The mains adapter should be fitted with a Y capacitor of at least 100 nF between the intermediate circuit voltage and PE as well as between GND and PE.
- Ensure a “good” PE connection between the mains adapter and the SE-24. It is important to have a good refeed of the high frequency leakage current, generated by the chopper in the SE-24 in combination with the winding capacity between the motor phase and the PE in the motor.
- In order to ensure that the limit values for the emitted radiation are not exceeded a shielded cable should be used.

NOTE	
	A “good” PE connection has a small impedance even at high interference frequencies.

CAUTION	
	For safety reasons, all PE conductors must be connected before commissioning. The EN 50178 regulations for the protective earthing must be complied with during installation.

12 Accessories

12.1 Programming cable SE-24, 3m (50315431)

The Programming cable SE-24 is needed together with the SE-24 Stick if the “afagTools” parameterization program is used to access the controller.

The Programming cable SE-24 is the connecting cable between the SE-24 servo controller and the SE-24 Stick and can be used for all types of the SE-servo controller.

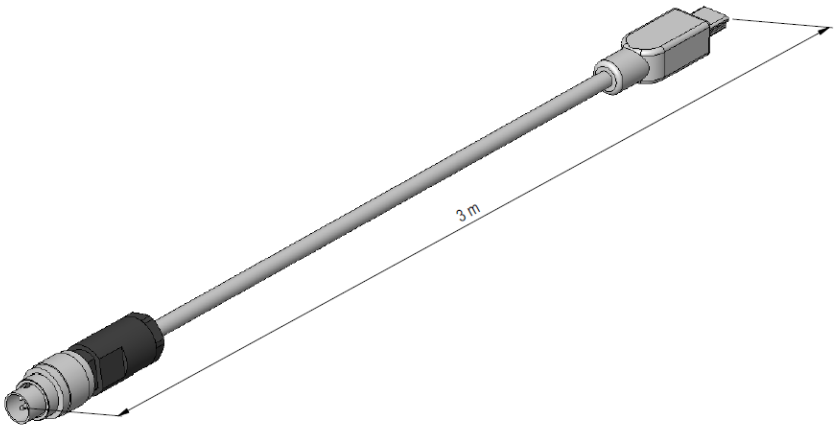

Figure 22: Programming cable SE-24

12.2 SE-24 Stick (50315432)

The SE-24 Stick is needed together with the Programming cable SE-24 if the “afagTools” parameterization program is used to access the controller.

The SE-24 Stick is the gateway from USB to CANopen and can be used for all types of the SE-24 servo controller.

Figure 23: SE-24 Stick

12.3 I/O cable SE-24, 5m (50312913)

The SE-24 I/O cable is the connection between the SE-24 servo controller and a higher level control system (PLC, PC) for transmission of digital inputs and outputs and can only be used for the type SE-24 I/O.

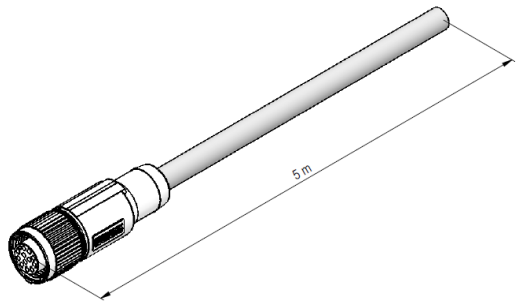

Figure 24: I/O cable SE-24

For details of the pin assignment and the colour code, please see chapter

7.1.2 Input and output connections [X2]

12.4 Power cable SE-24/SE-48, 5 m (50118124)

The Power cable SE-24/SE-48 is required for the power supply of the SE-24 servo controller and can be used for all types of the SE-24 servo controller.

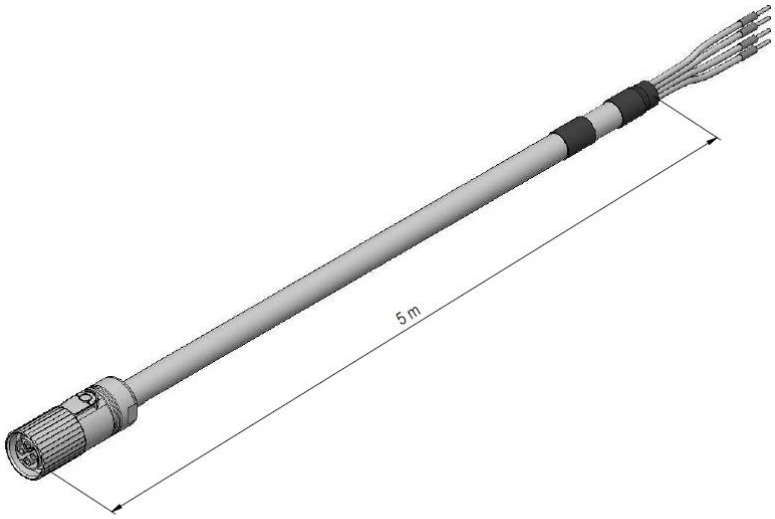

Figure 25: Power cable SE-24 / SE-48

For details of the pin assignment and the colour code, please see chapter

7.1.1 Power supply connection [X1]

12.5 Brake release switch SE-24 (50315438)

The Brake release switch SE-24 is needed when a motor with parking brake is connected to the SE-24 servo controller and the brake is to be released manually.

The Brake release switch SE-24 is inserted in the parameterization connection [X4] and can be used for all types of the SE-24 servo controller.

Figure 26: Brake release switch SE-24

⚠ CAUTION	
	Movements that cause danger! As the brake is released immediately after the brake release switch was pressed, the axis must be secured against unintentional movements before the brake release switch is actuated.

⚠ CAUTION	
	Danger by unintentional actuation! The brake switch should not remain inserted at the servo controller and must be removed immediately after it was used. The brake release switch must be stored at places where it can only be accessed by trained personnel.

Afag Automation AG

Luzernstrasse 32

6144 Zell

Switzerland

T +41 62 959 86 86

sales@afag.com

Afag GmbH

Wernher-von-Braun-Straße 1

92224 Amberg

Germany

T +49 9621 650 27-0

sales@afag.com

Afag Engineering GmbH

Gewerbestraße 11

78739 Hardt

Germany

T +49 7422 560 03-0

sales@afag.com

Afag Automation Americas

Schaeff Machinery & Services LLC.

883 Seven Oaks Blvd, Suite 800

Smyrna, TN 37167

USA

T +1 615 730 7515

nashville@afag.com

Afag Automation APAC

Afag Automation Technology (Shanghai) Co., Ltd.

Room 102, 1/F, Bldg. 56, City Of Elite

No.1000, Jinhai Road, Pudong New District

Shanghai, 201206

China

T +86 021 5895 8065

shanghai@afag.com